PIONEER
The Art of Entertainment

Service Manual

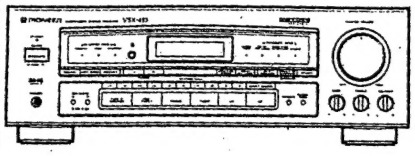

ORDER NO.
ARP2849

AUDIO/VIDEO STEREO RECEIVER

VSX-453
VSX-403
VSX-463S

THIS MANUAL IS APPLICABLE TO THE FOLLOWING MODEL(S) AND TYPE(S).

Type	Model			Power Requirement	The voltage can be converted by the following method.
	VSX-453	VSX-403	VSX-463S		
KUXJ	○	○	—	AC120V	———
KCXJ	○	○	○	AC120V	———
SDXJ	○	—	—	AC110V/120-127V/220V/240V	With the voltage selector

● **The " S " at the end of the model number indicates that a programable remote control unit is supplied.**

CONTENTS

1. SAFETY INFORMATION ····· 2
2. EXPLODED VIEWS, PACKING AND PARTS LIST ····· 3
3. SCHEMATIC AND PCB CONNECTION DIAGRAMS ····· 7
4. PCB PARTS LIST ····· 45
5. ADJUSTMENTS ····· 51
6. DISASSEMBLY ····· 52
7. BLOCK DIAGRAM ····· 53
8. IC INFORMATION ····· 54
9. REMOTE CONTROL UNIT [CU-VSX083 (AXD1387)] ····· 56
10. PANEL FACILITIES ····· 61
11. SPECIFICATIONS ····· 65

PIONEER ELECTRONIC CORPORATION 4-1, Meguro 1-Chome, Meguro-ku, Tokyo 153, Japan
PIONEER ELECTRONICS SERVICE INC. P.O. Box 1760, Long Beach, California 90801 U.S.A.
PIONEER ELECTRONICS OF CANADA, INC. 300 Allstate Parkway Markham, Ontario L3R 0P2 Canada
PIONEER ELECTRONIC [EUROPE] N.V. Haven 1087 Keetberglaan 1, 9120 Melsele, Belgium
PIONEER ELECTRONICS AUSTRALIA PTY. LTD. 178-184 Boundary Road, Braeside, Victoria 3195, Australia TEL: [03] 580-9911

© PIONEER ELECTRONIC CORPORATION 1994

O-DFS MAR. 1994 Printed in Japan

1. SAFETY INFORMATION

This service manual is intended for qualified service technicians; it is not meant for the casual do-it-yourselfer. Qualified technicians have the necessary test equipment and tools, and have been trained to properly and safely repair complex products such as those covered by this manual.
Improperly performed repairs can adversely affect the safety and reliability of the product and may void the warranty. If you are not qualified to perform the repair of this product properly and safely, you should not risk trying to do so and refer the repair to a qualified service technician.

WARNING

Lead in solder used in this product is listed by the California Health and Welfare agency as a known reproductive toxicant which may cause birth defects or other reproductive harm (California Health & Safety Code, Section 25249.5).
When servicing or handling circuit boards and other components which contain lead in solder, avoid unprotected skin contact with the solder. Also, when soldering do not inhale any smoke or fumes produced.

NOTICE
(FOR CANADIAN MODEL ONLY)
Fuse symbols (fast operating fuse) and/or (slow operating fuse) on PCB indicate that replacement parts must be of identical designation.

REMARQUE
(POUR MODÈLE CANADIEN SEULEMENT)
Les symboles de fusible (fusible de type rapide) et/ou (fusible de type lent) sur CCI indiquent que les pièces de remplacement doivent avoir la même désignation.

(FOR USA MODEL ONLY)

1. SAFETY PRECAUTIONS

The following check should be performed for the continued protection of the customer and service technician.

LEAKAGE CURRENT CHECK

Measure leakage current to a known earth ground (water pipe, conduit, etc.) by connecting a leakage current tester such as Simpson Model 229-2 or equivalent between the earth ground and all exposed metal parts of the appliance (input/output terminals, screwheads, metal overlays, control shaft, etc.). Plug the AC line cord of the appliance directly into a 120V AC 60Hz outlet and turn the AC power switch on. Any current measured must not exceed 0.5mA.

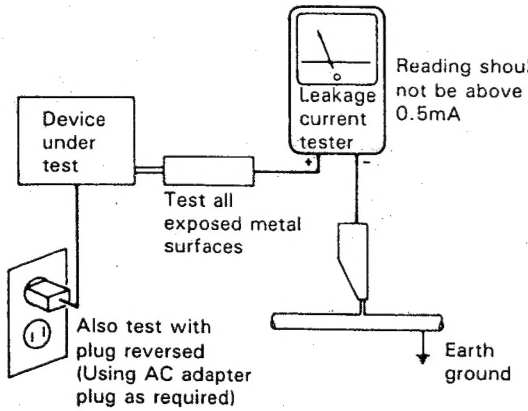

AC Leakage Test

ANY MEASUREMENTS NOT WITHIN THE LIMITS OUTLINED ABOVE ARE INDICATIVE OF A POTENTIAL SHOCK HAZARD AND MUST BE CORRECTED BEFORE RETURNING THE APPLIANCE TO THE CUSTOMER.

2. PRODUCT SAFETY NOTICE

Many electrical and mechanical parts in the appliance have special safety related characteristics. These are often not evident from visual inspection nor the protection afforded by them necessarily can be obtained by using replacement components rated for voltage, wattage, etc. Replacement parts which have these special safety characteristics are identified in this Service Manual.

Electrical components having such features are identified by marking with a ⚠ on the schematics and on the parts list in this Service Manual.
The use of a substitute replacement component which dose not have the same safety characteristics as the PIONEER recommended replacement one, shown in the parts list in this Service Manual, may create shock, fire, or other hazards.

Product Safety is continuously under review and new instructions are issued from time to time. For the latest information, always consult the current PIONEER Service Manual. A subscription to, or additional copies of, PIONEER Service Manual may be obtained at a nominal charge from PIONEER.

2. EXPLODED VIEWS, PACKING AND PARTS LIST

NOTES :

- *Parts marked by "NSP" are generally unavailable because they are not in our Master Spare Parts List.*
- *The ⚠ mark found on some component parts indicates the importance of the safety factor of the part. Therefore, when replacing, be sure to use parts of identical designation.*
- *Parts marked by "◉" are not always kept in stock. Their delivery time may be longer than usual or they may be unavailable.*

Parts List of Exterior and Packing

Mark	No.	Description	Parts No.
⚠	1	TRANSISTOR (Q3) (Except VSX−403)	2SA1302
⚠	1	TRANSISTOR (Q3) (For VSX−403)	2SA1804
⚠	2	TRANSISTOR (Q4) (Except VSX−403)	2SA1302
⚠	2	TRANSISTOR (Q4) (For VSX−403)	2SA1804
⚠	3	TRANSISTOR (Q6) (Except VSX−403)	2SA1265N
⚠	3	TRANSISTOR (Q6) (For VSX−403)	2SA1804
⚠	4	POWER TRANSISTOR (Q8)	2SA1803
⚠	5	TRANSISTOR (Q1) (Except VSX−403)	2SC3281
⚠	5	TRANSISTOR (Q1) (For VSX−403)	2SC4689
⚠	6	TRANSISTOR (Q2) (Except VSX−403)	2SC3281
⚠	6	TRANSISTOR (Q2) (For VSX−403)	2SC4689
⚠	7	TRANSISTOR (Q5) (Except VSX−403)	2SC3182N
⚠	7	TRANSISTOR (Q5) (For VSX−403)	2SC4689
⚠	8	POWER TRANSISTOR (Q7)	2SC4688
⚠	9	POWER TRANSFORMER (T1) (For VSX−453/KUXJ, KCXJ and VSX−463S)	ATS1521
⚠	9	POWER TRANSFORMER (T1) (For VSX−453/SDXJ)	ATS1522
⚠	9	POWER TRANSFORMER (T1) (For VSX−403/KUXJ)	ATS1523
⚠	9	POWER TRANSFORMER (T1) (For VSX−403/KCXJ)	ATS1549
⚠	10	FUSE (4A/125V, FU3)	REK1066
⚠	11	FUSE (4A/125V, FU4)	REK1066
⚠	12	FUSE (8A/125V, FU1) (For VSX−453/KUXJ, KCXJ and VSX−463S)	AEK1002
⚠	12	FUSE (4A/125V, FU1) (For VSX−453/SDXJ)	REK1066
⚠	12	FUSE (6.3A/125V, FU1) (For VSX−403)	REK1069
⚠	13	AC POWER CORD (For VSX−453/KUXJ and VSX−403/KUXJ)	ADG1152
⚠	13	AC POWER CORD (For VSX−453/KCXJ, VSX−463S/KCXJ and VSX−403/KCXJ)	ADG1126
⚠	13	AC POWER CORD (For VSX−453/SDXJ)	ADG1129
NSP	14	CHASSIS (MTL)	ANA1212
	15	REAR PANEL (MTL) (For VSX−453/KUXJ, KCXJ and VSX−463S)	ANC2166
	15	REAR PANEL (MTL) (For VSX−453/SDXJ)	ANC2167
	15	REAR PANEL (MTL) (For VSX−403)	ANC2168
NSP	16	HEAT SINK (Except VSX−403)	ANH1472
NSP	16	HEAT SINK (For VSX−403)	ANH1461
	17	INSULATOR (Except VSX−403)	AMR2592
	18	VOLUME HOLDER (MTL)	ANG1901
	19	INSULATOR (Except VSX−403)	PNW1912
NSP	20	PCB SUPPORT	AEC1013
NSP	21	PCB HOLDER	AEC1583
	22	SHEET (Except VSX−403)	AEE1014
	23	.....	
	24	PCB MOLD (PP)	AMR2533
	25	PCB MOLD (PP)	AMR2534
	26	SPACER (PLS)	AMR2544
	27	SCREW	ABA−298
	28	SCREW	ABA1018
	29	SCREW	ABA1024
	30	SCREW (STEEL)	ABA1053
	31	SCREW	ABA1147
	32	SCREW	ABA1082
	33	SCREW	BBZ30P080FZK
	34	SCREW	BCZ30P080FMC
	35	SCREW	BPZ26P080FMC
	36	NUT	NK90FUC
	37	FRONT PANEL (PLS) (For VSX−453)	AMB2229
	37	FRONT PANEL (PLS) (For VSX−463S)	AMB2487
	37	FRONT PANEL (PLS) (For VSX−403)	AMB2230
	38	DISPLAY PANEL (PLS)	AAK2558
	39	SASH (PLS)	AAK2445
	40	INDICATER PANEL A	AAK2450
	41	INDICATER PANEL B	AAK2451
	42	SASH S (PLS)	AAP1368
	43	NAME PLATE	PAM1608
	44	LED LENS	PNW2019
	45	ROUND KNOB L (PLS)	AAB1340
	46	ROUND KNOB M (PLS)	AAB1341
	47	FUNCTION BUTTON (PLS)	AAD2412
	48	HINGE BUTTON A (PLS)	AAD2413
	49	HINGE BUTTON B (PLS)	AAD2414
	50	SPEAKER BUTTON (PLS)	AAD2416

Mark	No.	Description	Parts No.
	51	TACT BUTTON (PLS)	AAD2417
	52	POWER BUTTON (PLS)	AAD2418
	53	BONNET CASE (MTL)	ANE1431
	54	OPERATING INSTRUCTIONS (English) (For VSX−453/KUXJ and SDXJ)	ARB1466
	54	OPERATING INSTRUCTIONS (English) (For VSX−403/KUXJ and KCXJ)	ARB1467
	55	REMOTE CONTROL UNIT (CU−VSX085) (Except VSX−463S)	AXD1386
	55	REMOTE CONTROL UNIT (CU−VSX083) (For VSX−463S)	AXD1387
	56	FM ANTENNA	ADH1017
NSP	57	BATTERY (R6P, AA) (Except VSX−463S)	AEX−010
NSP	57	BATTERY (LR6, AA) (For VSX−463S)	AEX1007
	58	LOOP ANTENNA (L8041)	ATB1009
	59	FRONT PAD (PS)	AHA1665
	60	REAR PAD (PS)	AHA1666
	61	PACKING CASE (For VSX−453/KUXJ and KCXJ)	AHD2678
	61	PACKING CASE (For VSX−453/SDXJ)	AHD2680
	61	PACKING CASE (For VSX−463S)	AHD2679
	61	PACKING CASE (For VSX−403)	AHD2681
	62	PACKING SHEET	AHG1210
	63	BATTERY COVER (except VSX−463S)	AZA7031
	64	MOTHER ASSY (For VSX−453/KUXJ, KCXJ and VSX−463S)	AWZ5376
	64	MOTHER ASSY (For VSX−453/SDXJ)	AWZ5443
	64	MOTHER ASSY (For VSX−403)	AWZ5377
	65	FRONT ASSY (Except VSX−453/SDXJ)	AWZ5375
	65	FRONT ASSY (For VSX−453/SDXJ)	AWZ5442
	66	REG. ASSY	AWZ5373
	67	FUNC ASSY	AWZ5379
	68	POWER. AMP ASSY (Except VSX−403)	AWZ5385
	68	POWER. AMP ASSY (For VSX−403)	AWZ5387
	69	VIDEO ASSY	AWZ5381
	70	VOL ASSY	AWZ5386
	71	TONE ASSY	AWZ5382
	72	R, C. SP ASSY (Except VSX−403)	AWZ5566
	72	R, C. SP ASSY (For VSX−403)	AWZ5567
	73	FM/AM TUNER MODULE	AXQ3112
	74	H. PHNE, SP. SW ASSY	AWZ5384
	75	TRANS ASSY	AWZ5380

Mark	No.	Description	Parts No.
	76	DOL. PRO. MOD. ASSY	AXQ3121
	77	.....	
⚠	78	VOLTAGE SELECTOR (S1) (VSX−453/SDXJ only)	AKX−507
⚠	79	VOLTAGE SELECTOR (S2) (VSX−453/SDXJ only)	AKX1004
	80	65 LABEL (KUXJ type only)	ORW1069
⚠	81	FUSE (4A/125V, FU2) (VSX−453/SDXJ only)	REK1066
NSP	82	FUSE HOLDER (VSX−453/SDXJ only)	AKR1005
	83	SCREW (VSX−453/SDXJ only)	ABA1009
	84	OPERATING INSTRUCTIONS (English and French) (For VSX−453/KCXJ and VSX−463S/KCXJ)	ARE1299
	84	OPERATING INSTRUCTIONS (French) (For VSX−403/KCXJ)	ARC1454
	85	OPERATING INSTRUCTIONS (Chinese and Spanish) (VSX−453/SDXJ only)	ARC1453
	86	FOOT (For VSX−403/KUXJ and KCXJ)	AEC1505
	87	LEAD WIRE (J13)	ADX1915
	88	SCREW	ABA1054

● Packing

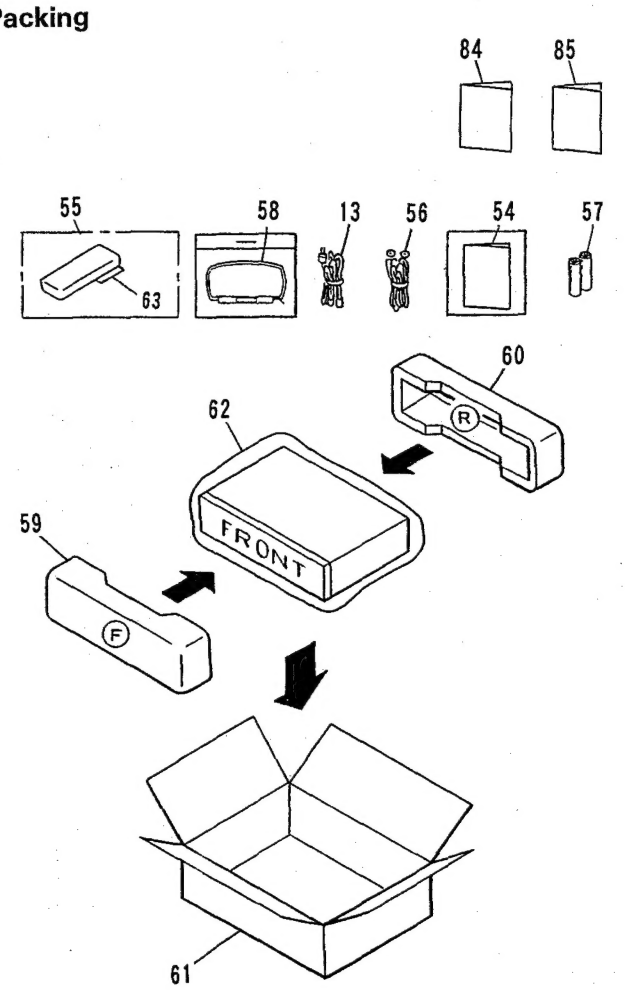

● Exterior

Note 1 : Screws adjacent to ▼ mark on the product are used for disassembly.
Note 2 : Used for heat sink.

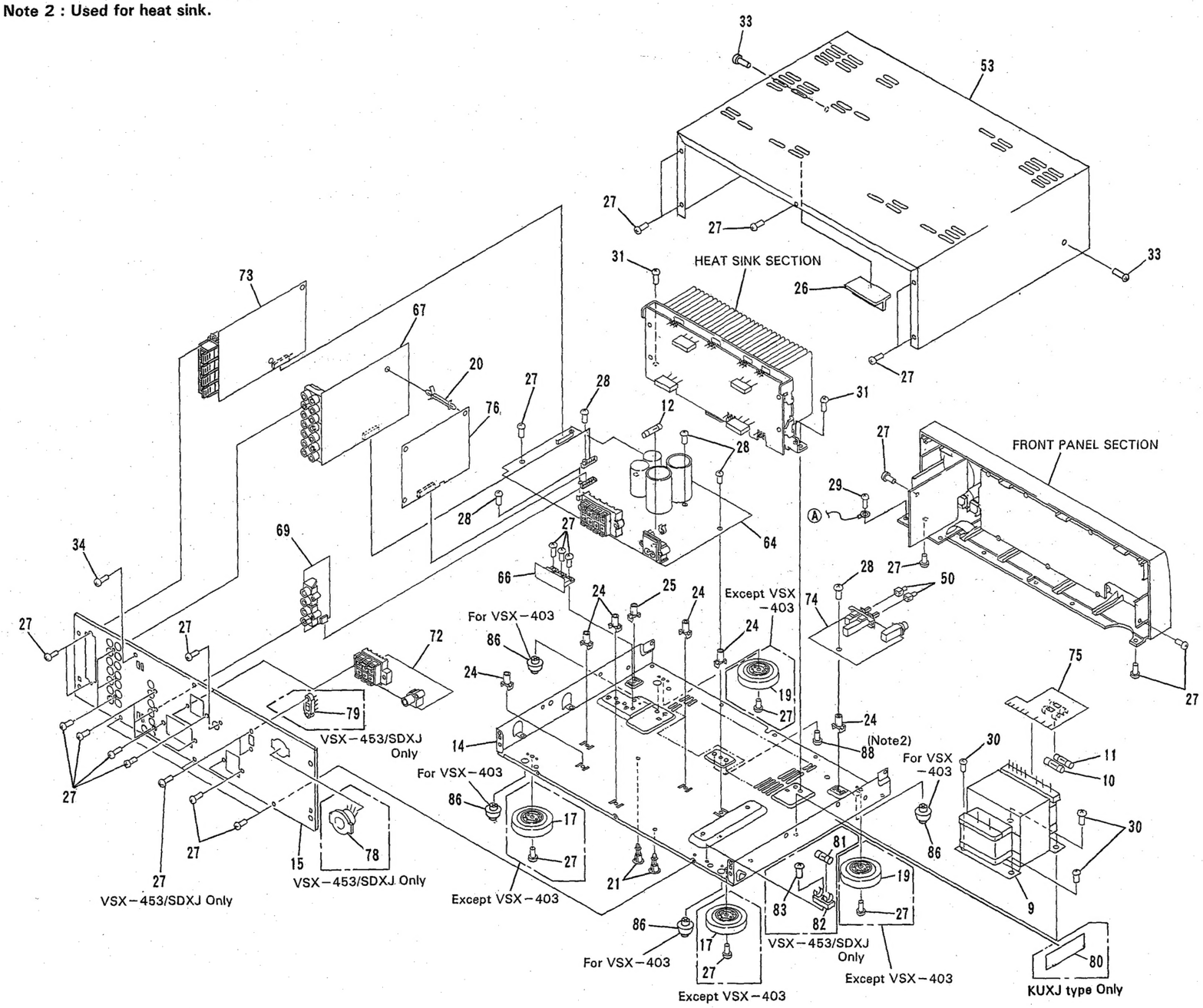

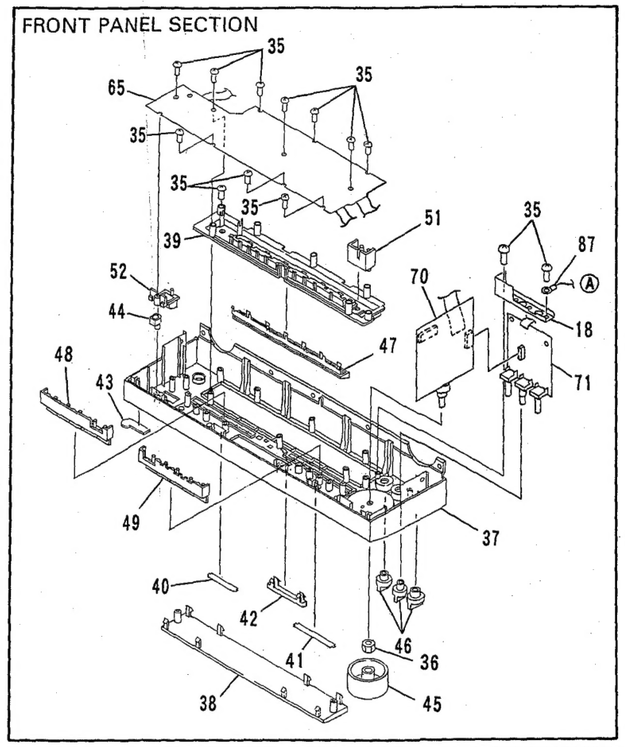

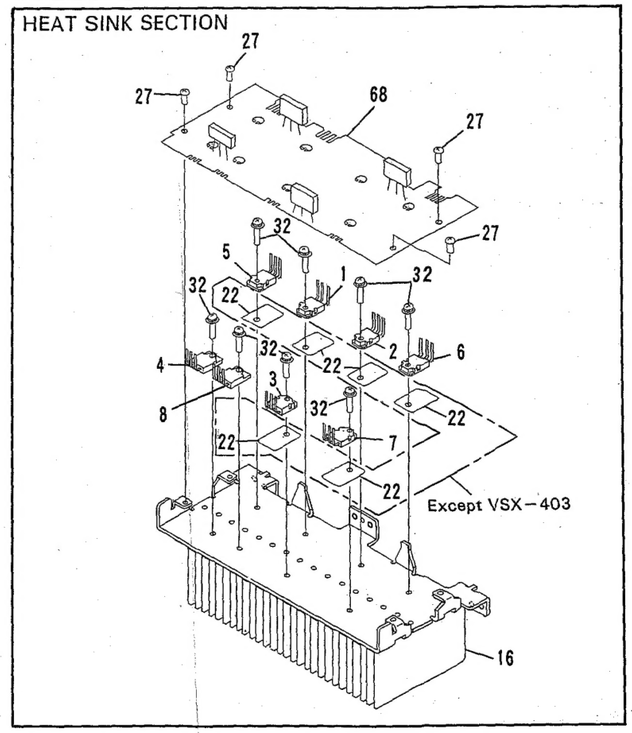

3. SCHEMATIC AND PCB CONNECTION DIAGRAMS

3.1 OVERALL SCHEMATIC DIAGRAM

NOTE FOR SCHEMATIC DIAGRAMS (Type 1A)

1. **When ordering service parts, be sure to refer to "PARTS LIST of EXPLODED VIEWS" or "PCB PARTS LIST".**
2. **Since these are basic circuits, some parts of them or the values of some components may be changed for improvement.**
3. **RESISTORS:**
   Unit: k:kΩ, M:MΩ, or Ω unless otherwise noted.
   Rated power: 1/4W, 1/6W, 1/8W, 1/10W unless otherwise noted.
   Tolerance: (F): ±1%, (G): ±2%, (K): ±10%, (M): ±20% or ±5% unless otherwise noted.
4. **CAPACITORS:**
   Unit: p:pF or μF unless otherwise noted.
   Ratings: capacitor (μF)/ voltage (V) unless otherwise noted.
   Rated voltage: 50V except for electrolytic capacitors.
5. **COILS:**
   Unit: m:mH or μH unless otherwise noted.
6. **VOLTAGE AND CURRENT:**
   [V] : Signal voltage at rated output.
   or ← V :
   DC voltage (V) at no input signal unless otherwise noted.
   Value in ( ) is DC voltage at rated power.
   ⇦ mA or ← mA :
   DC current at no input signal unless otherwise noted.
7. **OTHERS:**
   • ⊘ or ⊘ : Adjusting point.
   • : Measurement point.
   • The ⚠ mark found on some component parts indicates the importance of the safety factor of the parts. Therefore, when replacing, be sure to use parts of identical designation.
8. **SCH—□ ON THE SCHEMATIC DIAGRAM:**
   • SCH—□ indicates the drawing number of the schematic diagram. (SCH stands for schematic diagram.)
9. **SWITCHES** (Underline indicates switch position):

S1 VOLTAGE SELECTOR
(VSX- 453/SDXJ ONLY)
AC110V/120-127V/220V/240V

S2 VOLTAGE SELECTOR
(VSX- 453/SDXJ ONLY)
AC110-127V/220-240V

MOTHER assy
S701 9k/10k
(VSX- 453/SDXJ ONLY)

FRONT assy
S801 POWER
S802 BAND FM/AM
S803 MPX MODE
S804 MEMORY
S805 TUNE −
S806 TUNE +
S807 SIMULATED STEREO
S808 DOLBY 3CH LOGIC
S809 DOLBY PRO LOGIC
S810 SIMULATED SURROUND
S811 STUDIO
S812 ＊1
S813 ＊2
S814 ＊3
S815 ＊4
S816 ＊5
S817 ＊6
S818 ＊7
S819 ＊8
S820 ＊9
S821 ＊0
S822 DIRECT ACCESS
S823 TAPE2
S824 VCR
S825 PHONO
S826 TUNER
S827 LD
S828 CD
S829 RETURN
S830 S. BASS

H. PHNE, SP. SW assy
S670 SPEAKERS A ON/OFF
SPEAKERS B ON/OFF

	VSX-453 VSX-463S	VSX-403
Q1	2SC3281	2SC4689
Q2	2SC3281	2SC4689
Q3	2SA1302	2SA1804
Q4	2SA1302	2SA1804
Q5	2SC3182N	2SC4689
Q6	2SA1265N	2SA1804
Q7	2SC4688	2SC4688
Q8	2SA1803	2SA1803

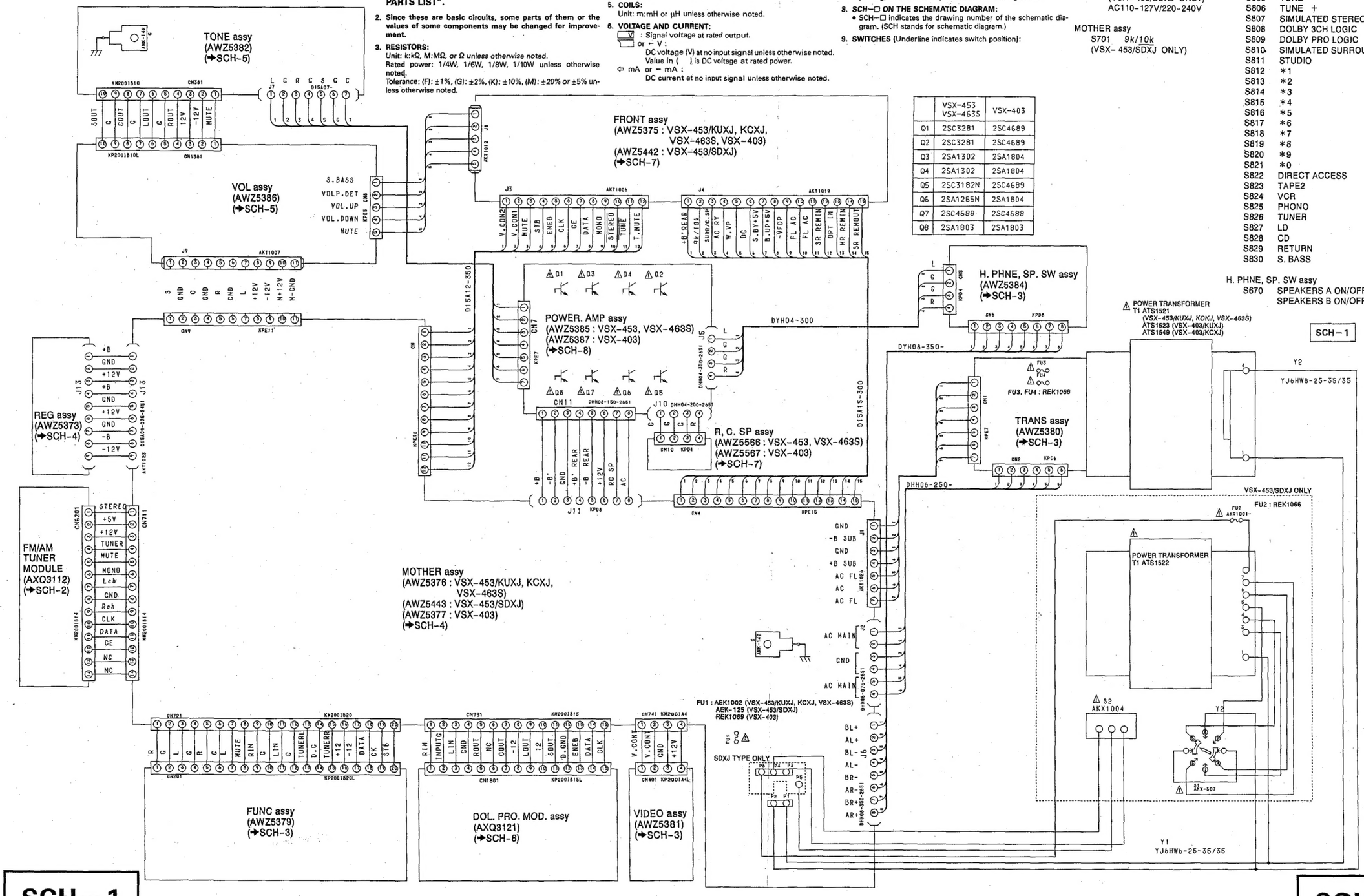

SCH—1 OVERALL SCHEMATIC DIAGRAM

3.2 FM/AM TUNER MODULE

● This diagram is viewed from the foil side.

3.2 FM/AM TUNER MODULE

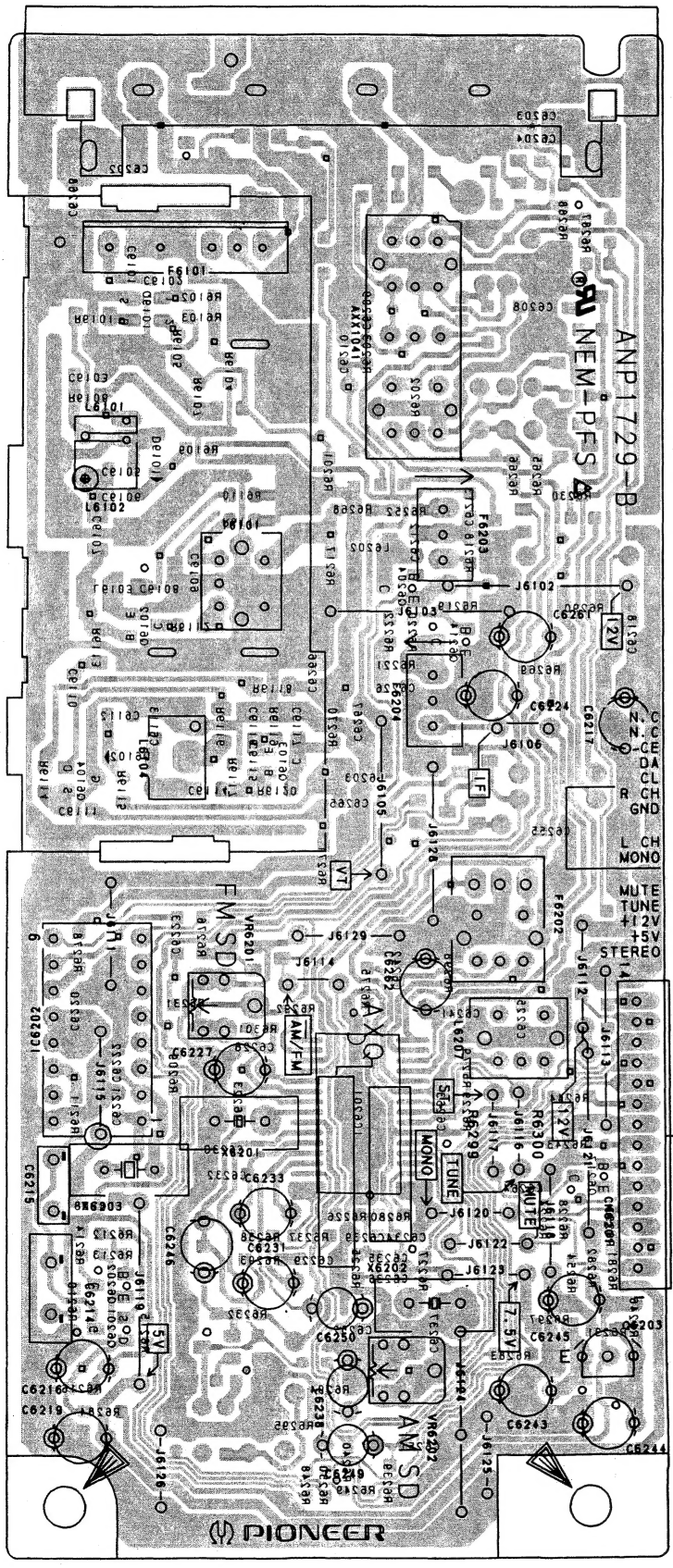

NOTE FOR PCB DIAGRAMS:

1. Part numbers in PCB diagrams match those in the schematic diagrams.
2. A comparison between the main parts of PCB and schematic diagrams is shown below.

Symbol in PCB Diagrams	Symbol in Schematic Diagrams	Part Name
Q504 E Q504	Q504 Q504	Transistor
D203 D203	D203	Diode
C513 C513	C513	Capacitor (Polarized)

3. The transistor terminal marked with E or ⊏ shows the emitter.
4. The diode terminal marked with ◎ or ⊐ shows cathode side.
5. The capacitor terminal marked with ◎ or ⊏ shows negative terminal.

• This diagram is viewed from the mounted parts side.

:FM signal route
:AM signal route

SCH-2

FM/AM TUNER MODULE
(AXQ3112)

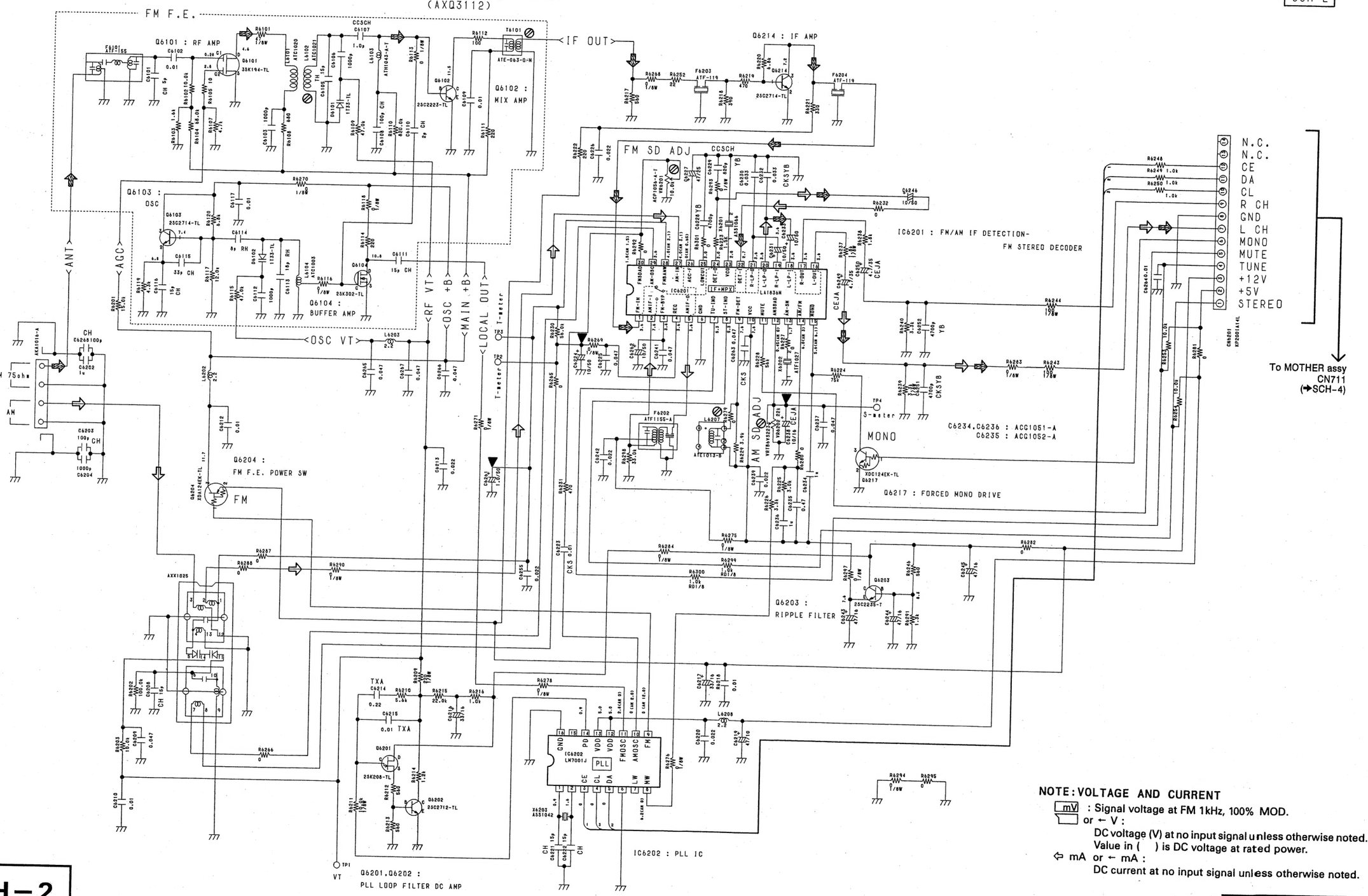

NOTE: VOLTAGE AND CURRENT

mV : Signal voltage at FM 1kHz, 100% MOD.
or ← V :
DC voltage (V) at no input signal unless otherwise noted.
Value in ( ) is DC voltage at rated power.
⇦ mA or ← mA :
DC current at no input signal unless otherwise noted.

SCH-2
FM/AM TUNER MODULE

3.3 FUNC ASSY, VIDEO ASSY, H. PHNE, SP. SW ASSY AND TRANS ASSY

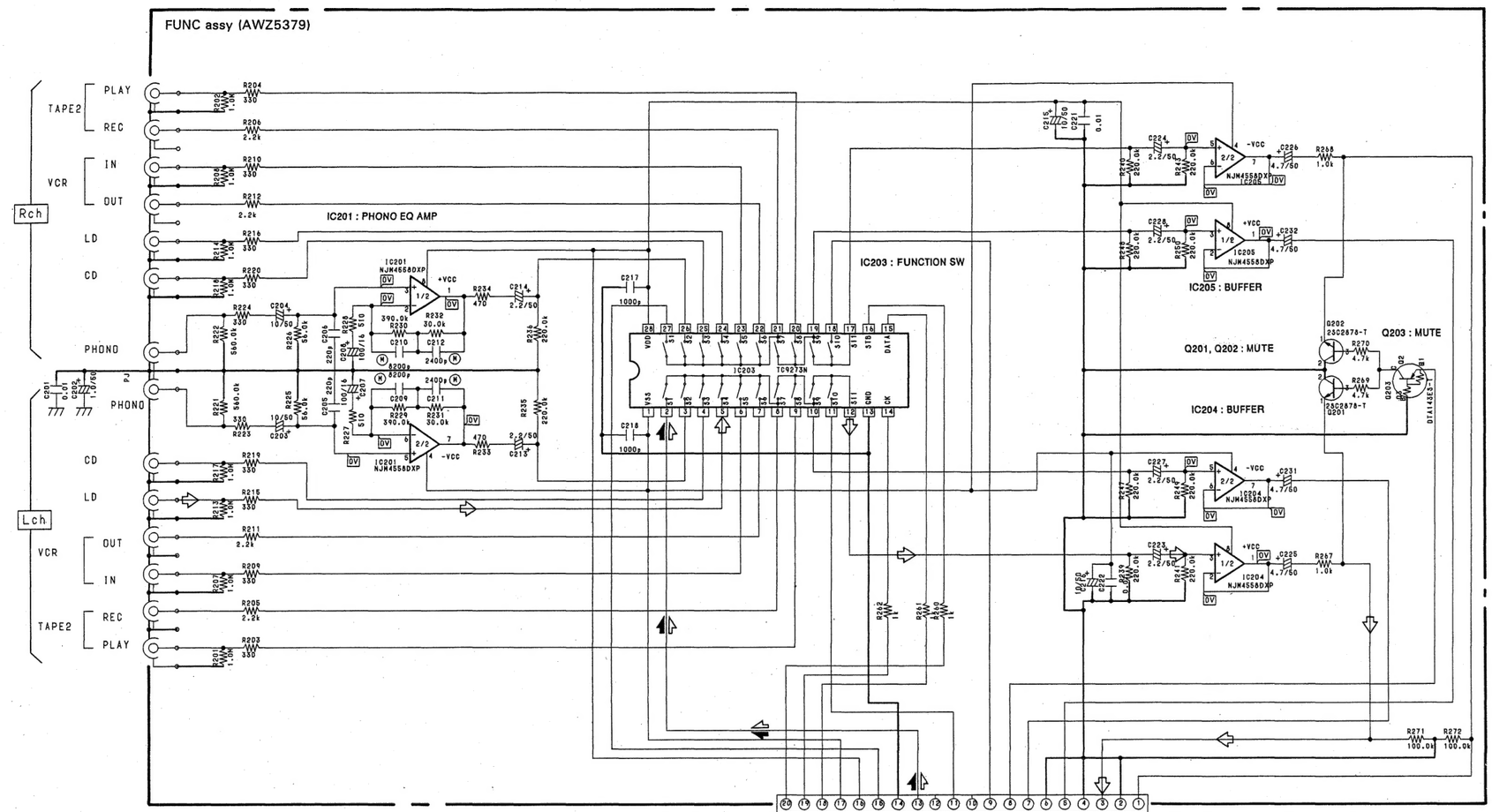

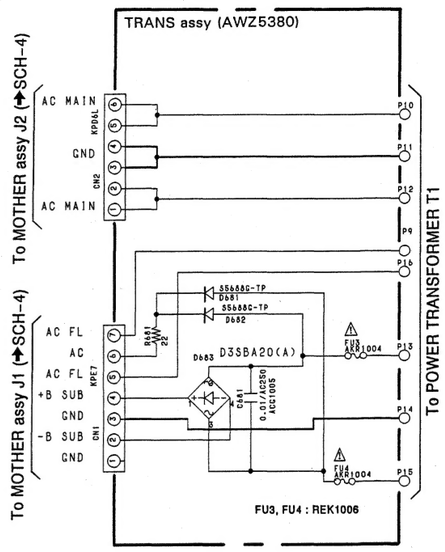

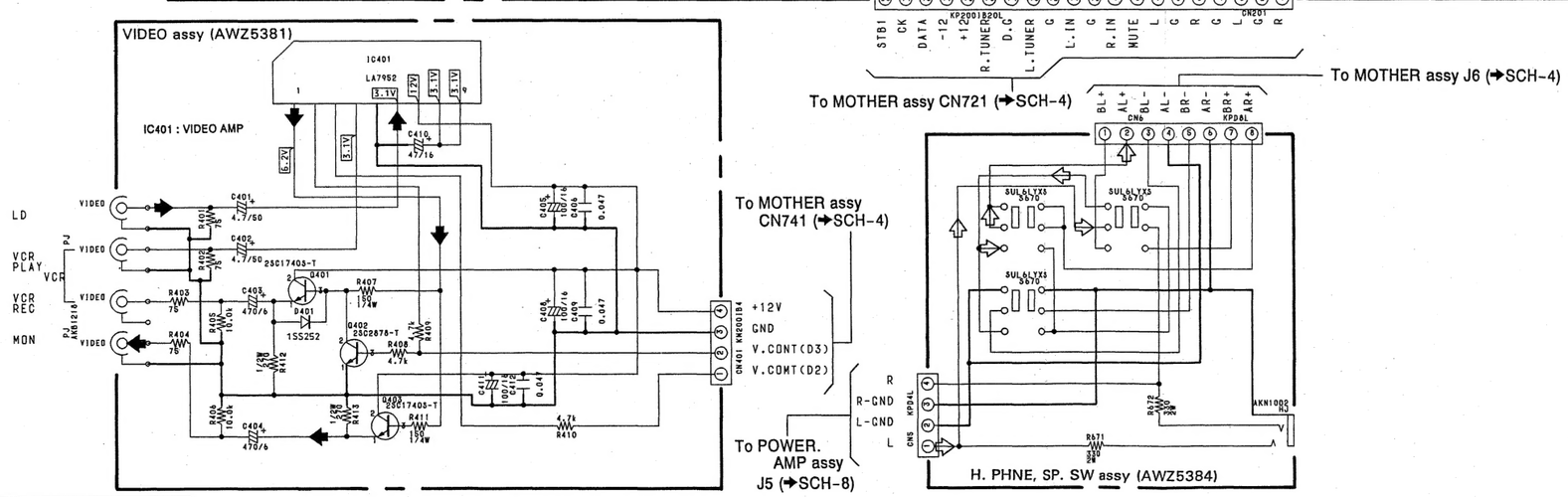

SIGNAL ROUTE
- : VIDEO SIGNAL
- : AUDIO SIGNAL
- : FM SIGNAL
- : AM SIGNAL

SCH-3 FUNC ASSY, VIDEO ASSY, H. PHNE, SP. SW ASSY, TRANS ASSY

FUNC ASSY, VIDEO ASSY, H. PHNE, SP. SW ASSY, TRANS ASSY **SCH-3**

VIDEO assy

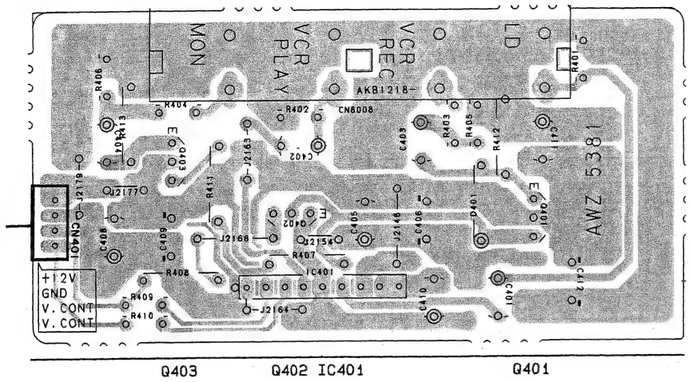

To MOTHER assy CN741

- This diagram is viewed from the mounted parts side.

TRANS assy

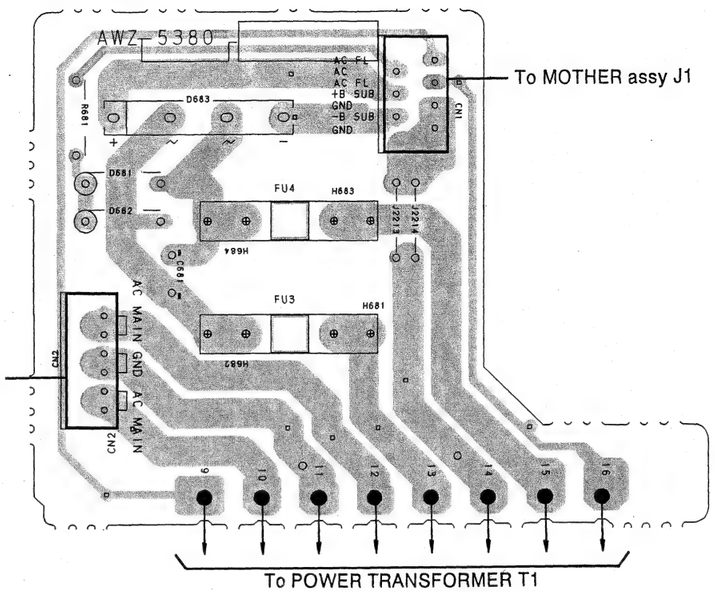

To MOTHER assy J1

To MOTHER assy J2

To POWER TRANSFORMER T1

FUNC assy

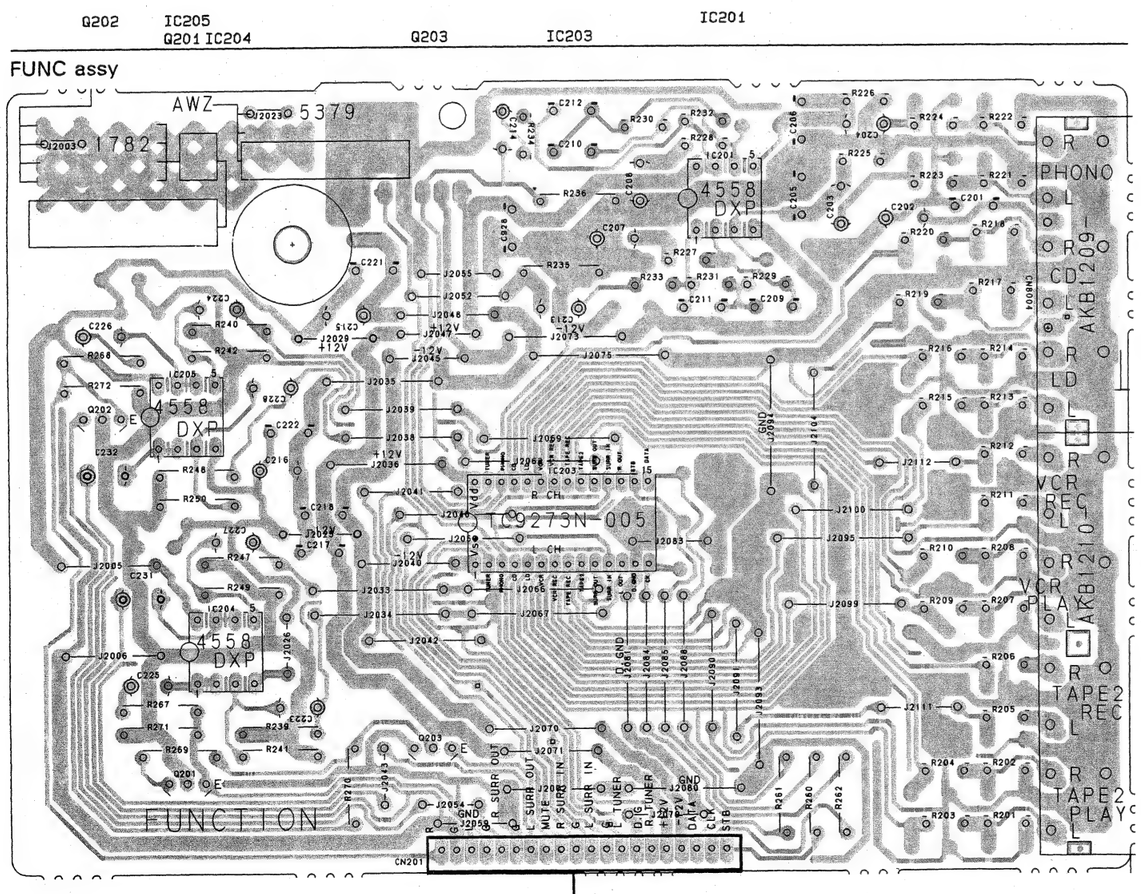

To MOTHER assy CN721

H. PHNE, SP. SW assy

To POWER. AMP assy J5

To MOTHER assy J6

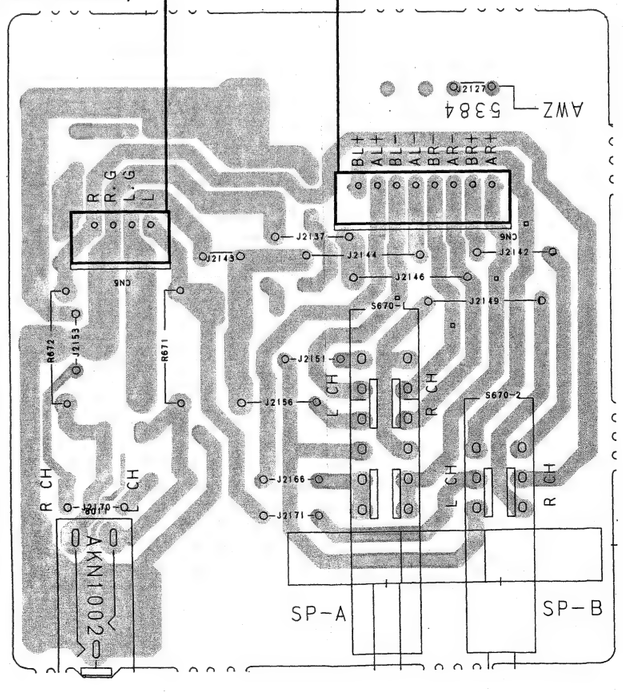

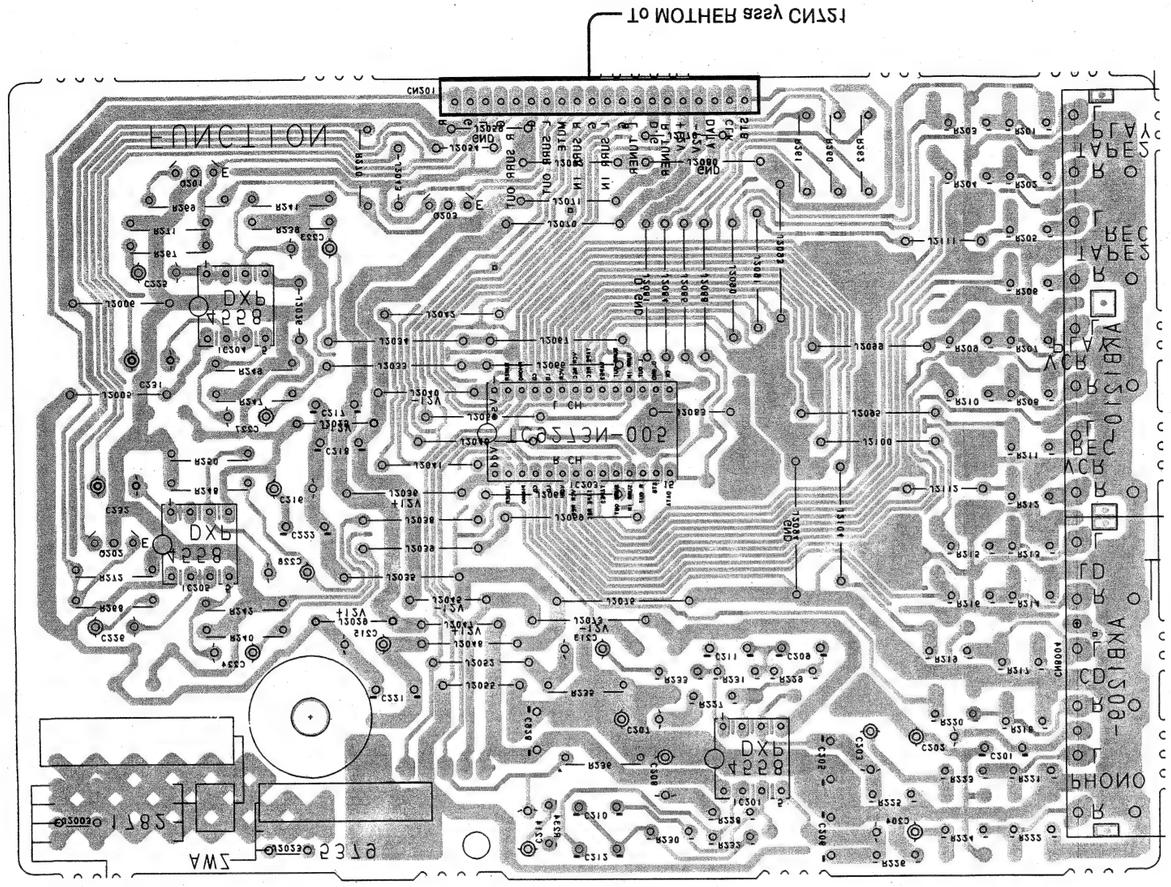
To MOTHER assy CN151
FUNCTION
TAPE REC
TAPE PLAY
VCR REC
VCR PLAY
CD
PHONO
LCD-200-NET5
DX4
DX5
DX6
DX7
DX8
DX9
DX10
DX11
DX12
DX13
DX14
DX15
DX16
DX17
DX18
DX19
DX20
DX21
DX22
DX23
DX24
DX25
DX26
DX27
DX28
DX29
DX30
DX31
DX32
DX33
DX34
DX35
DX36
DX37
DX38
DX39
DX40
DX41
DX42
DX43

A.4 MOTHER ASSY AND REG ASSY

VSX-4E3, VSX-4O3, VSX-4ES2

- This diagram is viewed from the foil side.

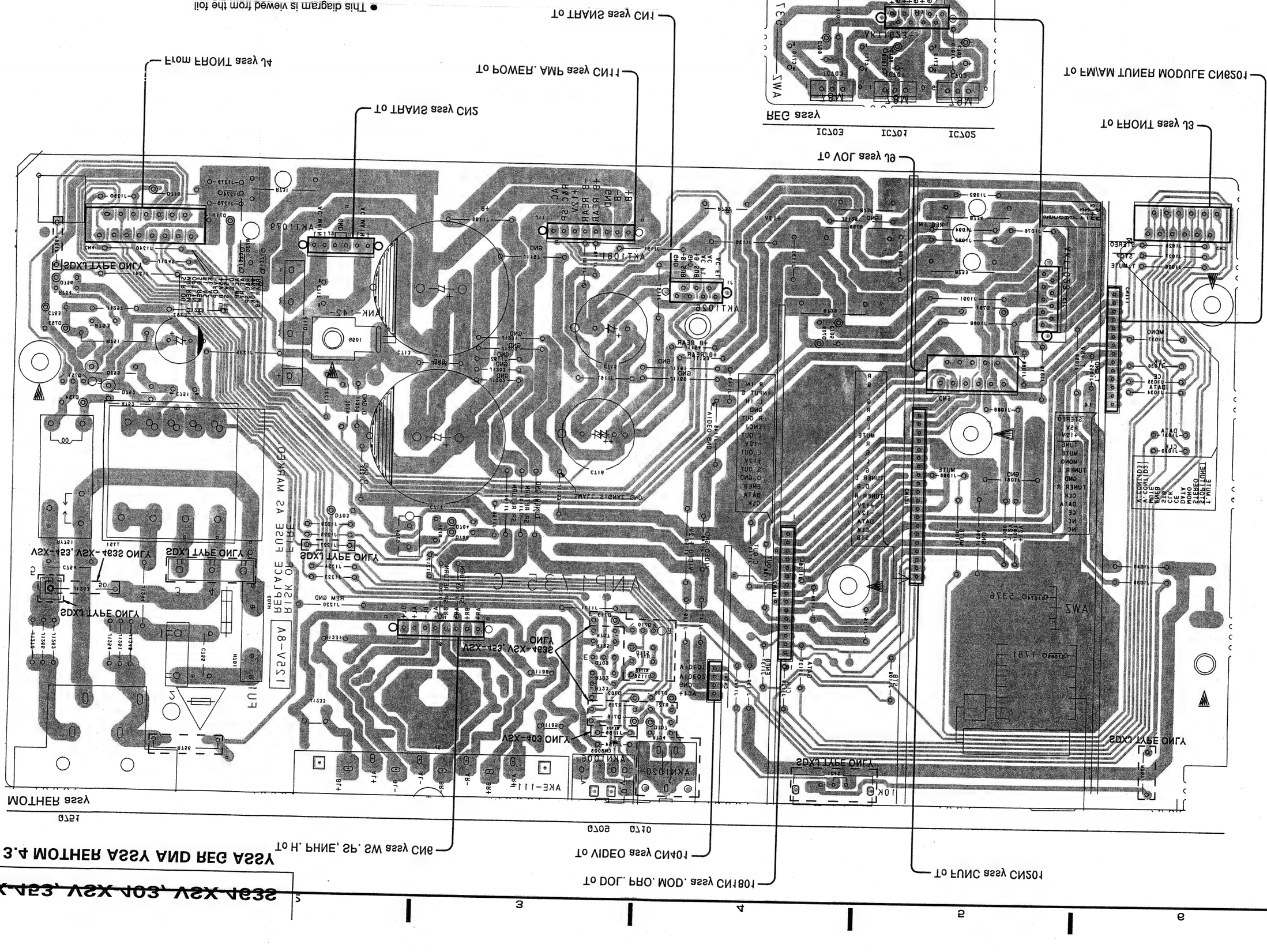

3.4 MOTHER ASSY AND REG ASSY

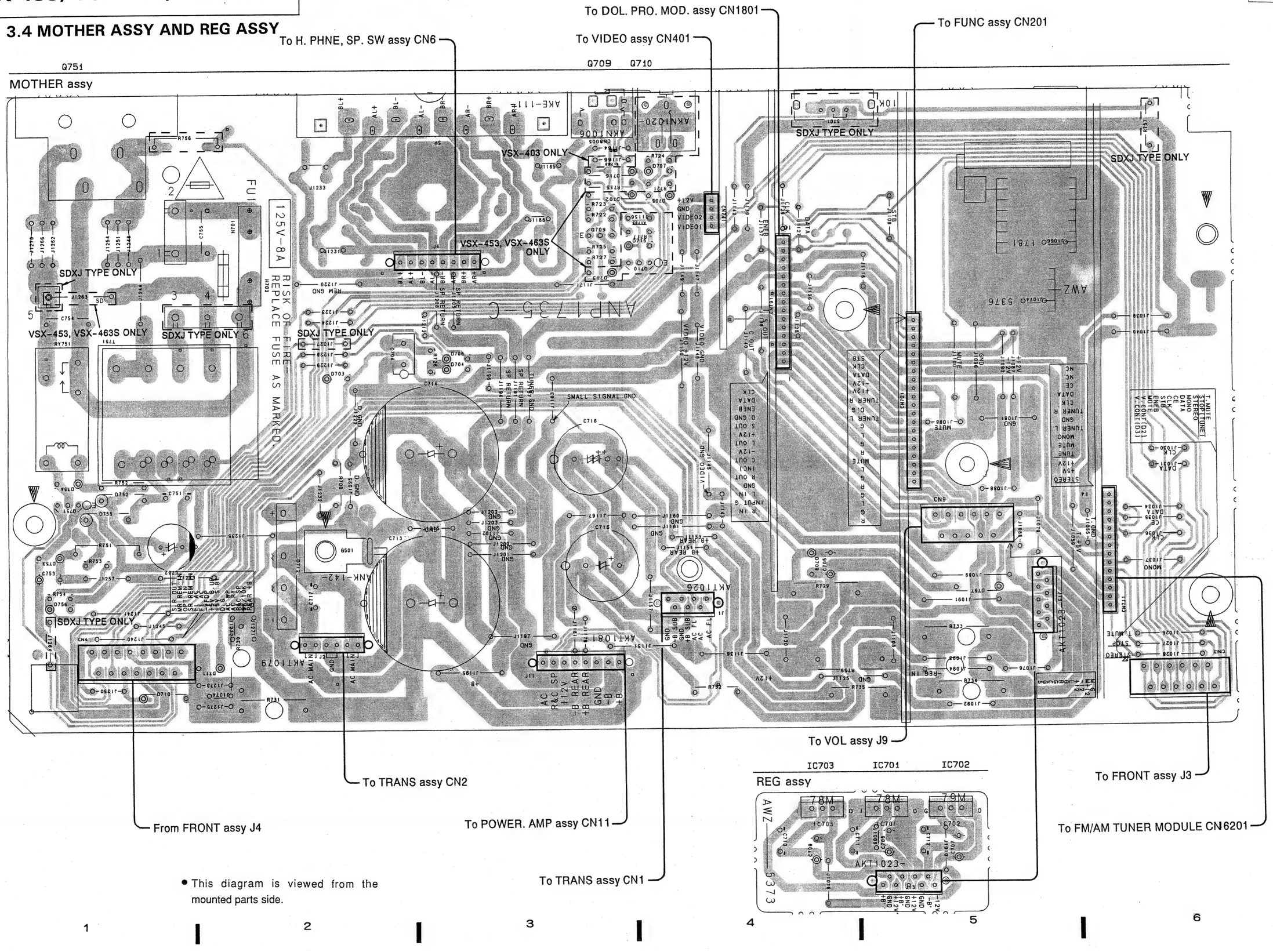

- This diagram is viewed from the mounted parts side.

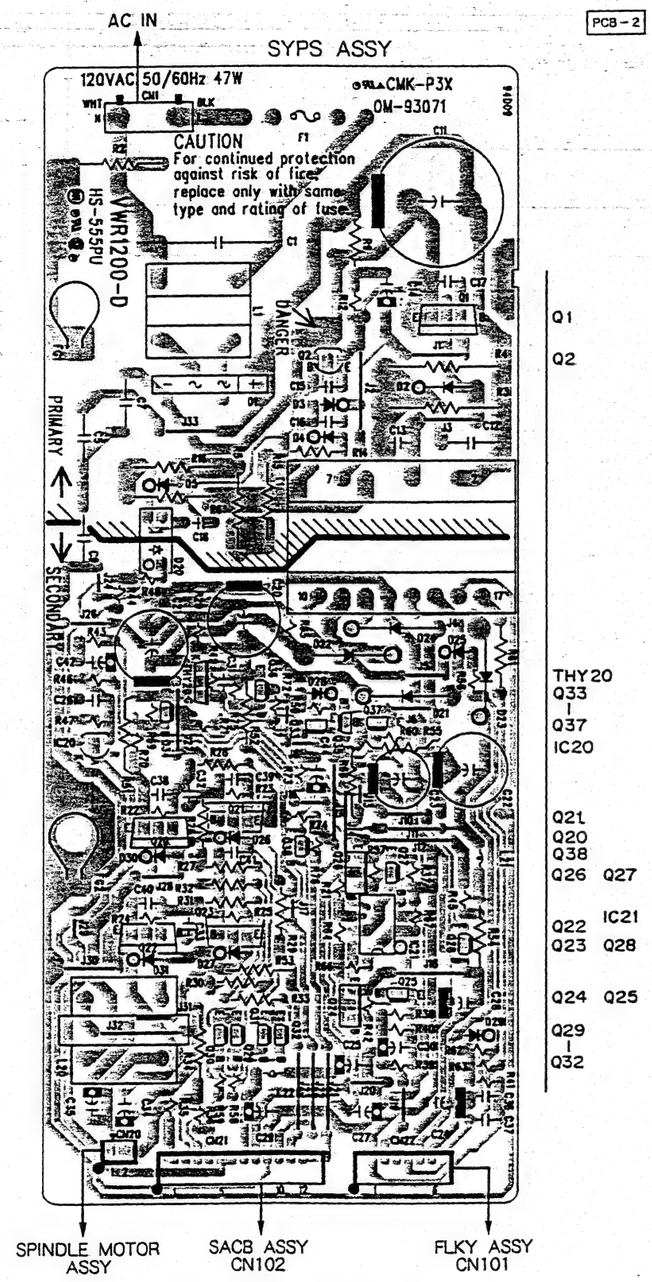

● This diagram is viewed from the mounted parts side.

NOTE FOR SCHEMATIC DIAGRAMS (Type 4A)

1. **When ordering service parts, be sure to refer to "PARTS LIST of EXPLODED VIEWS" or "PCB PARTS LIST".**

2. **Since these are basic circuits, some parts of them or the values of some components may be changed for improvement.**

3. **RESISTORS:**
   Unit: k:kΩ, M:MΩ, or Ω unless otherwise noted.
   Rated power: 1/4W, 1/6W, 1/8W, 1/10W unless otherwise noted.
   Tolerance:(F):±1%, (G):±2%, (K):±10%, (M):±20% or ±5% unless otherwise noted.

4. **CAPACITORS:**
   Unit : p:pF or μF unless otherwise noted.
   Ratings : capacitor (μF) / voltage (V) unless otherwise noted.
   Rated voltage : 50V except for electrolytic capacitors.

5. **COILS:**
   Unit : m:mH or μH unless otherwise noted.

6. **VOLTAGE AND CURRENT:**
   ▭ or ←V :
   DC voltage (V) in PLAY mode unless otherwise noted.
   ⇦mA or ←mA :
   DC current in PLAY mode unless otherwise noted.
   Value in ( ) is DC current in STOP mode.

7. **OTHERS:**
   ● ⊘ or ⊘ : Adjusting point.
   ● ◀ : Measurement point.
   ● The ⚠ mark found on some component parts indicates the importance of the safety factor of the parts. Therefore, when replacing, be sure to use parts of identical designation.

8. **SCH – □ ON THE SCHEMATIC DIAGRAM:**
   ● SCH–□ indicates the drawing number of the schematic diagram. (SCH stands for schematic diagram.)

9. **SWITCHES** (Underline indicates switch position):

FLKY ASSY
- S101 : DIRECT CD
- S102 : DISC SIDE A
- S103 : DISC SIDE B
- S104 : FILM MODE
- S105 : FL OFF
- S106 : OPEN/CLOSE(⏏)
- S107 : PLAY/PAUSE(▶/❚❚)
- S108 : STOP(■)

PONS ASSY
- S201 : POWER(STANDBY/ON)

LOSB ASSY
- S1 : SW1
- S2 : SW2
- S3 : SW3

NOTE FOR PCB DIAGRAMS:

1. Part numbers in PCB diagrams match those in the schematic diagrams.
2. A comparison between the main parts of PCB and schematic diagrams is shown below.

Symbol in PCB Diagrams	Symbol in Schematic Diagrams	Part Name
B C E	B C E B C E	Transistor
B C E	B C E B C E	Transistor with resistor
D G S	D G S D G S	Field effect transistor
		Resistor array
		3-terminal regulator

FL IN

■ VAW

• FL TU

• ANOD

● PIN

Pin No.
1
2
3
4
5
6
7
8
9
10
11
12
13
14
15
16
17
18
19
20
21
22
23
24
25
26
27

F1, F2
a~r : A

PCB – 2

NOTE FOR SCHEMATIC DIAGRAMS (Type 4A)

1. **When ordering service parts, be sure to refer to "PARTS LIST of EXPLODED VIEWS" or "PCB PARTS LIST".**

2. **Since these are basic circuits, some parts of them or the values of some components may be changed for improvement.**

3. **RESISTORS:**
   Unit: kΩ, M:MΩ, or Ω unless otherwise noted.
   Rated power: 1/4W, 1/6W, 1/8W, 1/10W unless otherwise noted.
   Tolerance:(F):±1%, (G):±2%, (K):±10%, (M):±20% or ±5% unless otherwise noted.

4. **CAPACITORS:**
   Unit : p:pF or μF unless otherwise noted.
   Ratings : capacitor (μF) / voltage (V) unless otherwise noted.
   Rated voltage : 50V except for electrolytic capacitors.

5. **COILS:**
   Unit : m:mH or μH unless otherwise noted.

6. **VOLTAGE AND CURRENT:**
   ▭ or ←V :
   DC voltage (V) in PLAY mode unless otherwise noted.
   ⇦mA or ←mA :
   DC current in PLAY mode unless otherwise noted.
   Value in ( ) is DC current in STOP mode.

7. **OTHERS:**
   - ⊘ or ⊘ : Adjusting point.
   - ● ◀ : Measurement point.
   - The ⚠ mark found on some component parts indicates the importance of the safety factor of the parts. Therefore, when replacing, be sure to use parts of identical designation.

8. **SCH – □ ON THE SCHEMATIC DIAGRAM:**
   - SCH–□ indicates the drawing number of the schematic diagram. (SCH stands for schematic diagram.)

9. **SWITCHES** (Underline indicates switch position):

FLKY ASSY
- S101 : DIRECT CD
- S102 : DISC SIDE A
- S103 : DISC SIDE B
- S104 : FILM MODE
- S105 : FL OFF
- S106 : OPEN/CLOSE(▲)
- S107 : PLAY/PAUSE(▶/❚❚)
- S108 : STOP(■)

PONS ASSY
- S201 : POWER(STANDBY/ON)

LOSB ASSY
- S1 : SW1
- S2 : SW2
- S3 : SW3

NOTE FOR PCB DIAGRAMS:

1. Part numbers in PCB diagrams match those in the schematic diagrams.
2. A comparison between the main parts of PCB and schematic diagrams is shown below.

Symbol in PCB Diagrams	Symbol in Schematic Diagrams	Part Name
	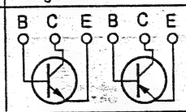	Transistor
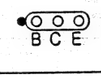	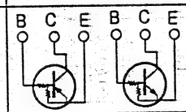	Transistor with resistor
	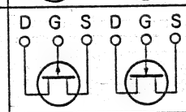	Field effect transistor
	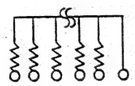	Resistor array
	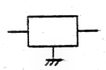	3-terminal regulator

FL INFORMATION

■ VAW1037 (V101:FLKY ASSY)

- FL TUBE

● ANODE GRID ASSIGNMENT

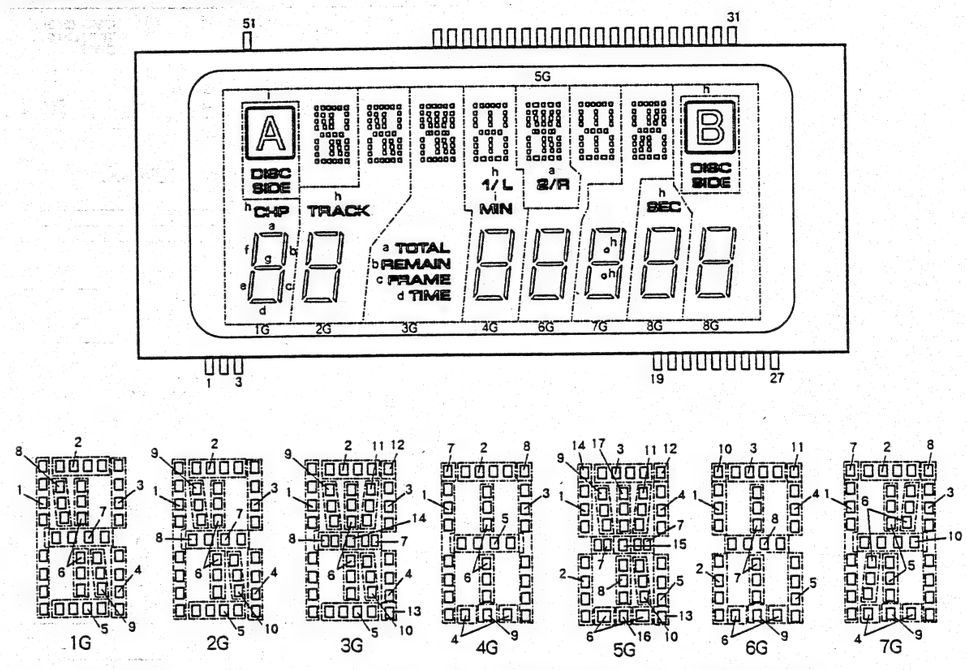

● PIN ASSIGNMENT

Pin No.	Assignment	Pin No.	Assignment
1	F1	28	NL
2	F1	29	NL
3	F1	30	NL
4	NL	31	g
5	NL	32	h
6	NL	33	i
7	NL	34	j
8	NL	35	k
9	NL	36	l
10	NL	37	m
11	NL	38	n
12	NL	39	o
13	NL	40	p
14	NL	41	q
15	NL	42	r
16	NL	43	9G
17	NL	44	8G
18	NL	45	7G
19	f	46	6G
20	e	47	5G
21	d	48	4G
22	c	49	3G
23	b	50	2G
24	a	51	1G
25	F2	52	NL
26	F2	53	NL
27	F2	54	NL

F1, F2 : Filament
a~r : Anode
1G~9G : Grid
NL : No lead

● ANODE GRID ASSIGNMENT & PIN ASSIGNMENT

	1G	2G	3G	4G	5G	6G	7G	8G	9G
a	a	a	TOTAL	a	2/R	a	a	a	a
b	b	b	REMAIN	b	17	b	b	b	b
c	c	c	FRAME	c	16	c	c	c	c
d	d	d	TIME	d	15	d	d	d	d
e	e	e	14	e	14	e	e	e	e
f	f	f	13	f	13	f	f	f	f
g	g	g	12	g	12	g	g	g	g
h	CHP	TRACK	11	1/L	11	11	° °	SEC	[B] DISC SIDE
i	[A] DISC SIDE	10	10	MIN	10	10	10		
j	9	9	9	9	9	9	9		
k	8	8	8	8	8	8	8		
l	7	7	7	7	7	7	7		
m	6	6	6	6	6	6	6		
n	5	5	5	5	5	5	5		
o	4	4	4	4	4	4	4		
p	3	3	3	3	3	3	3		
q	2	2	2	2	2	2	2		
r	1	1	1	1	1	1	1		

3.3 SACB ASSY(1/3 : FTS & CONT SECTION)

SACB ASSY (1/3)
(VWS1191 : CLD-99)
(VWS1189 : CLD-79)
• FTS & CONT SECTION

IC101 PD0205D
IC101 : MECHANISM CONTROL IC

Q102, Q103 : FG SIGNAL WAVEFORMER

IC803 (2/2) : TILT/LOAD DRIVE

IC803 (1/2) : SLDR DRIVE

Q801 – Q804 : RF BUFFER

Q152 : RF AMP.

Q805 : RF CORRECTION

Q154 : LD EFM MUTE

IC903 (2/2) : JUMP SIGNAL FORMER

Q913 : FOCUS BALANCE SWITCHING

IC801 PSP [PAC002A]
IC801 : TRKG. FOCUS AND TILT ERROR AMP.

Q834 : LD POWER SUPPLY

IC902 (1/2) : TRKG DRIVE

IC903 (1/2) : SLIDER ERROR AMP.

IC902 (2/2) : FOCUS DRIVE

Q963 : POWER ON

DVDB ASSY (1/2)
CN54 (➡SCH-6)

GND SCK1 SI1 XCS 2FSC
1 2 3 4 5
D F G W

DVDB ASSY (1/2)
CN52 (➡SCH-6)

TDLAT CDG MCNLAT DRVB DRVA FR PWMI ACCONT GCONT SPERR THOLD WFM XG
813B-PH-K-S CN52
1 2 3 4 5 6 7 8 9 10 11 12 13
M H N I J Y X V C T K O L

R4517 0

Q102, Q154, Q802, Q912, Q963, Q992 : 2SA1037K
Q103 : UN2212
Q801, Q805, Q903–Q905, Q907–Q909, Q911, Q913, Q917, Q919 : 2SC2412K
Q916, Q991 : UN2112
Q962 : 2SK184

➡: RF Signal Line
➡: TRKG Servo Loop Line
➡: FOCUS Servo Loop Line
➡: SLDR Servo Loop Line
➡: Audio Signal Line

P Q R S

83P-SHF-1AA CN125
EFLG 1
FSX 2
GND 3

PLL OFFSET W317

DSP [LC78681E]
IC802
DIGITAL SURROUND PROCESSOR

FSX WRQ RWC 3OOUT CDIN #CCK #RESET #LASER 16M 4M CONT XIN
SBCK SFSY PW EFLG SBSY DACLK DFOUT TESTO LRCK
AO AI PDO VSS #EPHO EPHO EPHI CLV+ CLV- FOCS FST #FZD VDD THLD TGL TOFF FSEQ

C894 0.01
C897 1000P
C892 0.1
C891 1000P
C159 18P
R926 220K
R894 2.2K
R893 470
R892 470
R891 470
R898 220

L391 12 16
C391 228/6.3
C392 0.1
C395 0.01
R333 1M
VR101 47K
PHASE ADJ.
R395 22
R396 91
JA15 VKB1052-
L392 VTL1042-A
C393 18P
C394 0.01
L394 100
R895 1K
JA9 GP1F32T
R896 1.5K
C896 0.1
C895 220/6.3
IC391 TC74HCU04AP

AUDIO (➡SCH-4,5)
MCK
XRESET
SCK
A DATA
LRCK
SO3 (ATT)
SCK3 (SHIFT)
PVC LATCH
XANA
MUTE
XCX
SQ1
SQ2
DEMP
RF GND
RF
VCXO

L804 10 100
C931 27P
R951 0
R182 2.2K
C933 100/10
C932 0.1
C934 1200P
R952 470K
R953 470K
R954 3.3K
C981 0.1
C991 0.1
R181 22K
C982 10/50
C983 2200P
R987 22K
R902 1K
R903 22K
C902 10/50
R179 4.7K
R918 2.2K
R176 4.7K
R955 22K
R956 47K
C984 1/50
R989 47K
Q983
Q984
Q985
Q987
R913 33K
C907 2200P
C908 0.1
R914 18K
R915 18K
C905 0.22
C906 2200P
R916 100K
R917 100K
C161 150P
R180 33K
C910 0.1
R881 330K
R147 330K
C976 22/25
C987 1SS254
R979 330K
R977 150K
R975 2.2K
R974 2.7K
D963 1SS254
R978 10K
R989 10K
Q963
R990 47K
Q916
R148 68K
C987 22/25
Q991
R991 10K
D991 MTZJ10B
R993 2.2K
R992 1K
Q992
D993 1SS254
D992 1SS254
R994 22
Q993 2SC1740S
R995 6.8K
D994 MTZJ6.2A
C991 1F/5.5

Q903, Q904 : TRKG ERROR
Q907 : TRKG ERROR MUTE
Q905 : TRKG ERROR LIMITER SW
Q963 : POWER ON MUTE

Q917 : LIMITER
Q908 : GAIN CONTROL

C926 22/50
C929 0.01
C930 0.033
C928 0.1
C927 100/10
R949 10K
R950 150K
R948 10K
C925 0.047
R947 47K
R943 15K
C923 0.12
R942 15K
R946 47K
R944 4.7K
R945 4.7K
R169 4.7K
R170 100K
C924 0.1
R187 100K
R188 100K
R941 220K
R940 2K
R938 68K
C920 0.1
R159 100K
C919 3300P
C922 220/10
C921 0.22
R939 220
R933 150K
R932 4.7K
C937 0.01
R935 68K
R936 68K
R930 68K
R931 15K
C163 100P
C986 0.22
R196 15K
R928 68K
C162 220P
R166 470K
C935 220P
D984 1SS254
Q911
Q912
Q983
R197 2.2K
R195 470K
C936 1000P
R934 47K
C988 0.1
R927 33K
VR612 47K
C915 0.1
C914 1000P
R921 8.2K
R922 2.2K
C912 47/50
R923 2.2K
C911 0.047
C917 0.047
R920 470K
R919 47K
R918 22K
R966 47K
D986 1SS254
R958 22K
C985 100/10
C909 0.1
C128 47/10
R150 10K
R149 22K
R151 15K
R152 10K
IC102 1/2
IC102 2/2
8A10393F

R175 33K
C158 0.01
R174 33K
C157 0.01
R178 33K
IC804 1/2
8A4560F IC804
IC804 2/2
R171 33K
C155 0.1
R172 33K
J11 1 2 3 4

ASP [PAC003A] IC901
SERVO CONTROL IC

SACB ASSY (1/3)

SCH-3

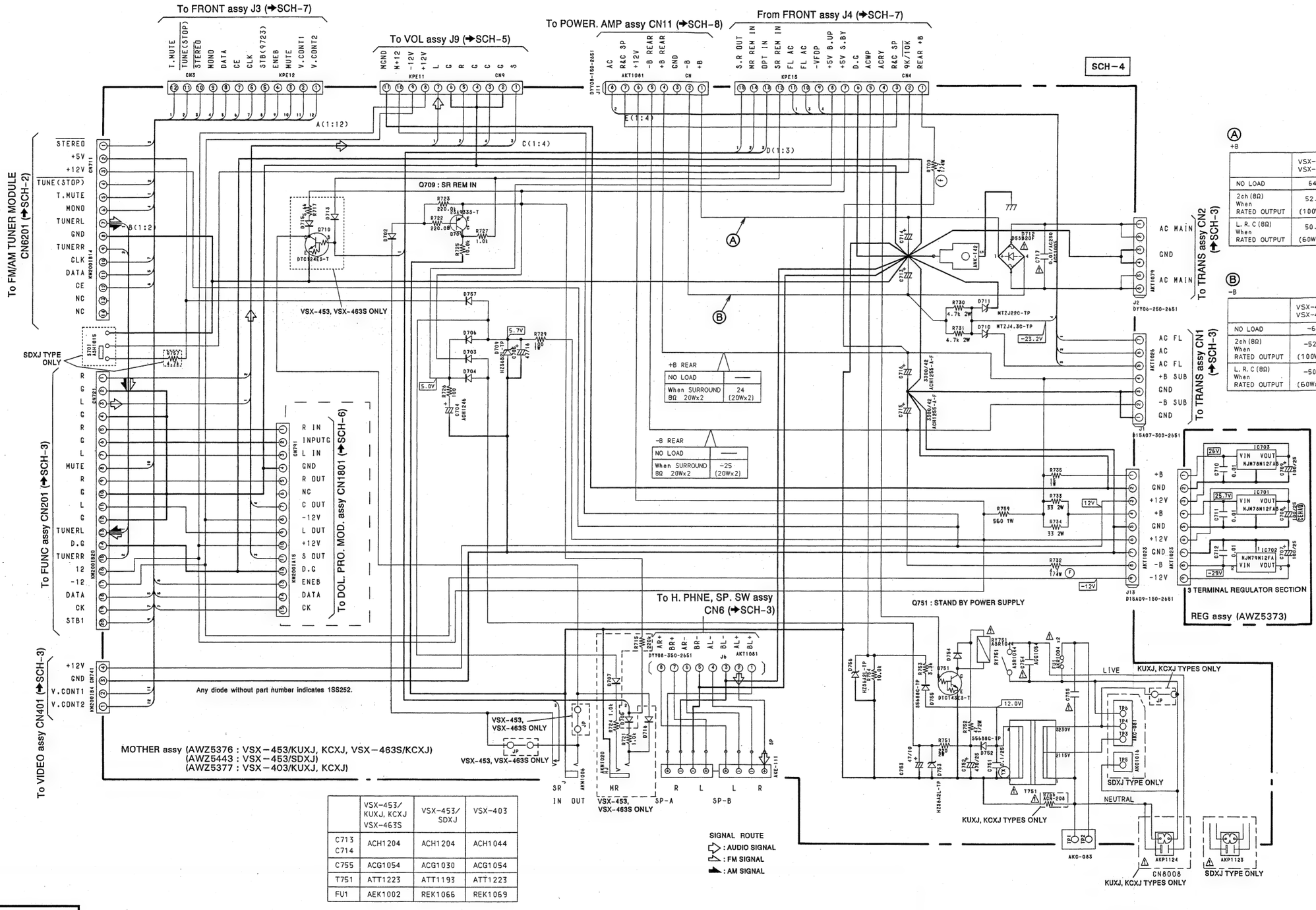

Ⓐ +B

	VSX-453 VSX-463S	VSX-403
NO LOAD	64	50.4
2ch (8Ω) When RATED OUTPUT	52.5 (100Wx2)	42.4 (65Wx2)
L, R, C (8Ω) When RATED OUTPUT	50.7 (60Wx3)	40.4 (45Wx3)

Ⓑ -B

	VSX-453 VSX-463S	VSX-403
NO LOAD	-64	-50.5
2ch (8Ω) When RATED OUTPUT	-52.5 (100Wx2)	-42.4 (65Wx2)
L, R, C (8Ω) When RATED OUTPUT	-50.7 (60Wx3)	-40.4 (45Wx3)

+B REAR

NO LOAD	—
When SURROUND 8Ω 20Wx2	24 (20Wx2)

-B REAR

NO LOAD	—
When SURROUND 8Ω 20Wx2	-25 (20Wx2)

	VSX-453/ KUXJ, KCXJ VSX-463S	VSX-453/ SDXJ	VSX-403
C713 C714	ACH1204	ACH1204	ACH1044
C755	ACG1054	ACG1030	ACG1054
T751	ATT1223	ATT1193	ATT1223
FU1	AEK1002	REK1066	REK1069

SCH-4 MOTHER ASSY, REG ASSY

MOTHER ASSY, REG ASSY **SCH-4**

3.5 VOL ASSY AND TONE ASSY

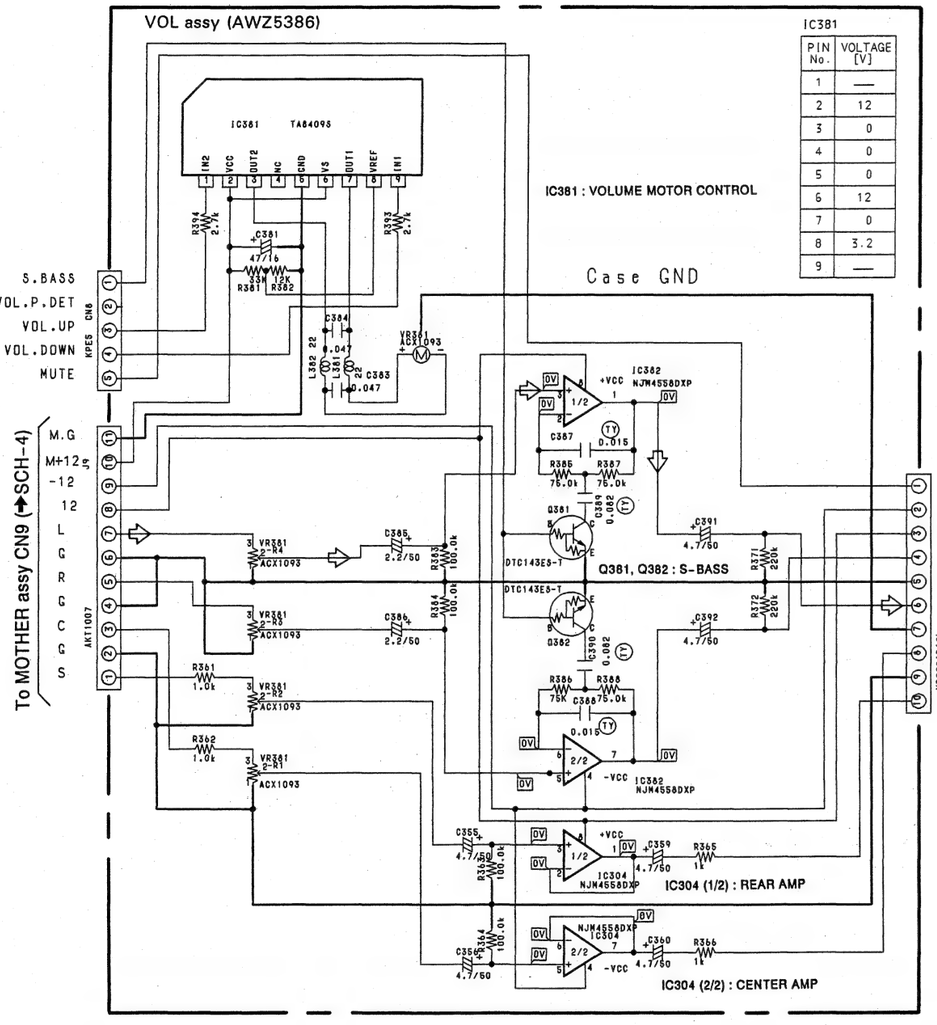

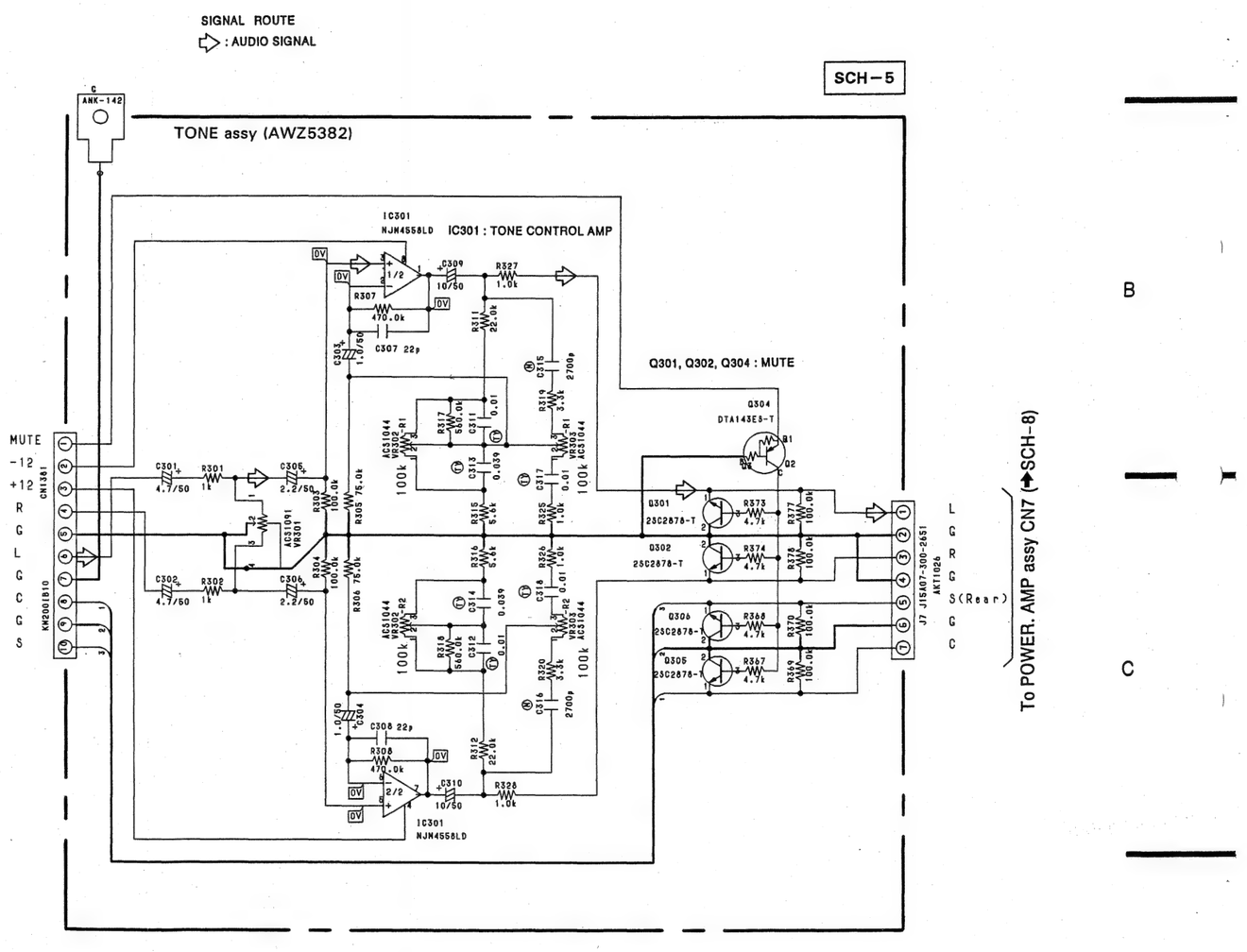

• This diagram is viewed from the mounted parts side.

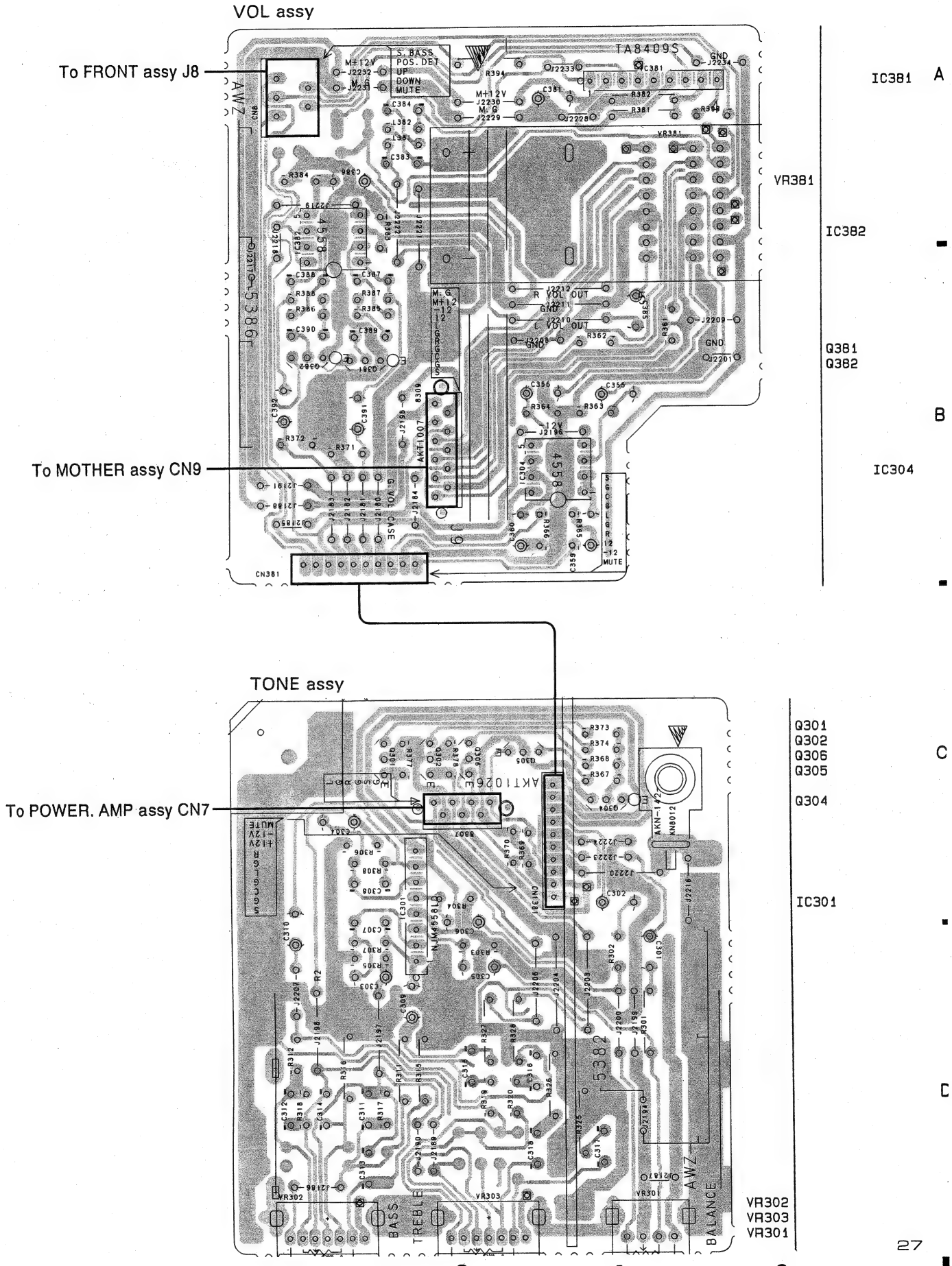

● This diagram is viewed from the foil side.

3.6 DOL. PRO. MOD. ASSY

- This diagram is viewed from the gray colored foil side.
- This PCB is double side.

DOL. PRO. MOD. assy

3.6 DOL. PRO. MOD. ASSY

- This diagram is viewed from the pink colored foil side.
- This PCB is double sided.

IC1803 IC1804

IC1802 IC1801 Q1801

DOL. PRO. MOD. assy

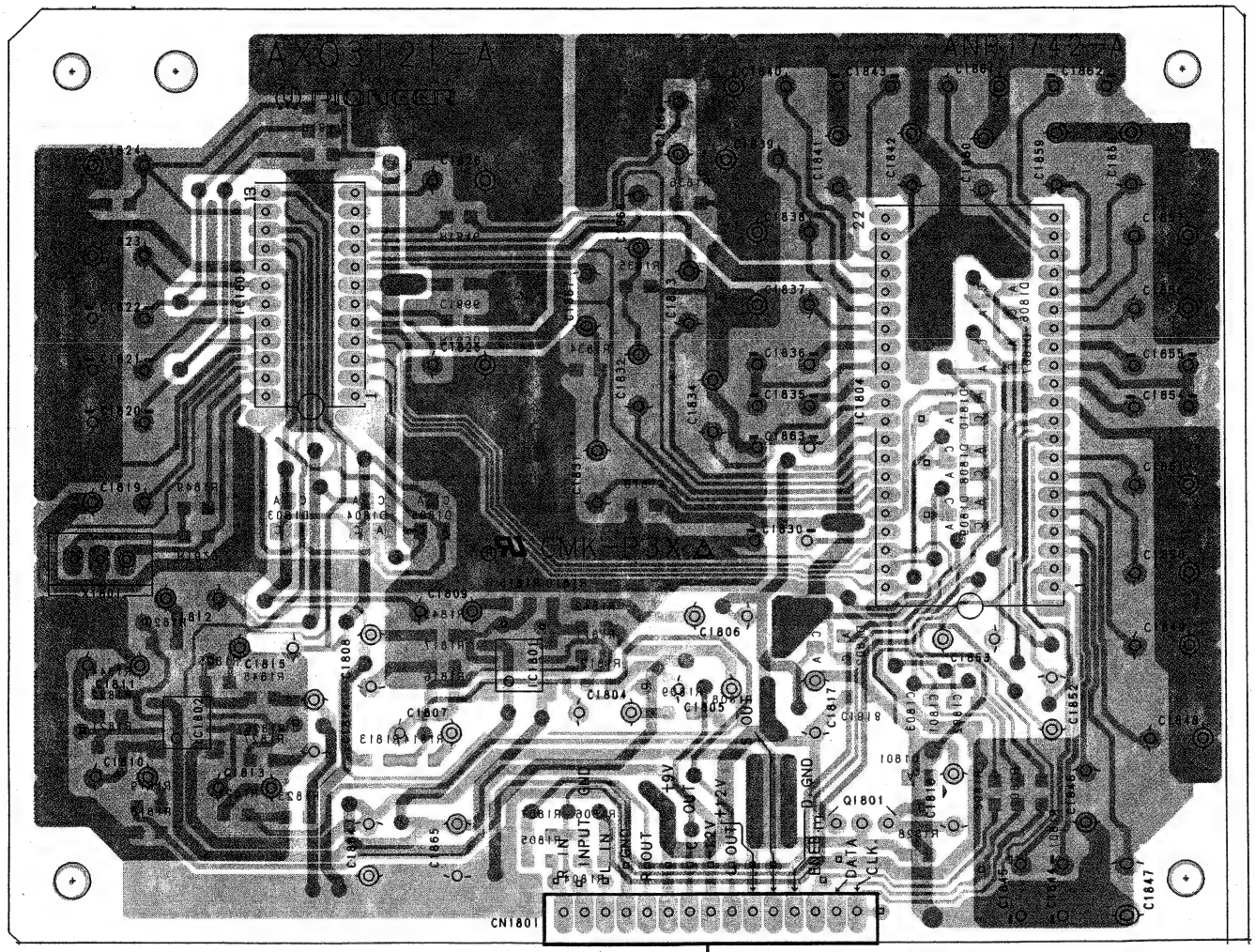

To MOTHER assy CN791

DOL. PRO. MOD. assy (AXQ3121)

SCH-6

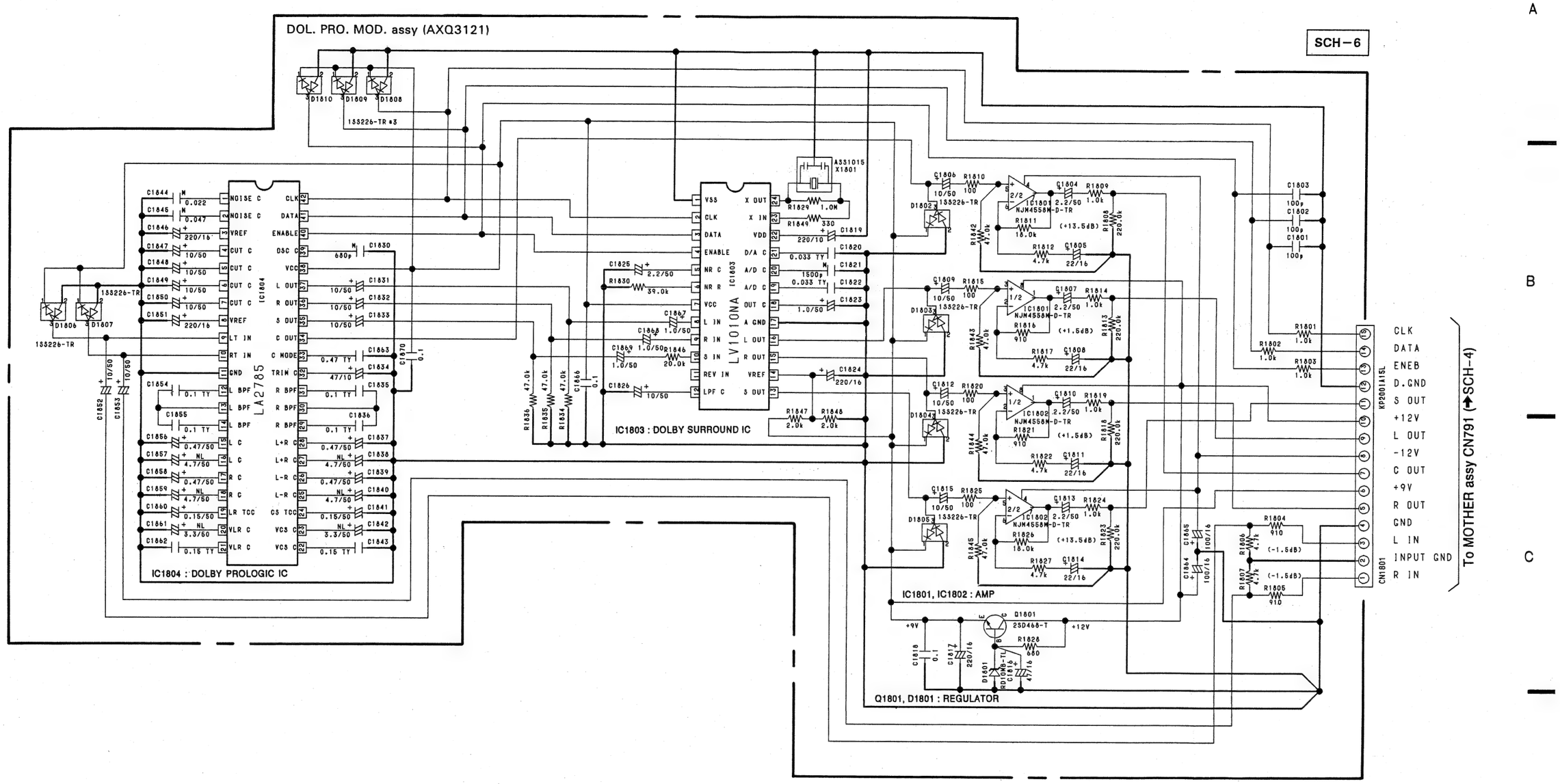

SCH-6 DOL. PRO. MOD. ASSY

SCH-6 DOL. PRO. MOD. ASSY

3.7 FRONT ASSY AND R, C. SP ASSY

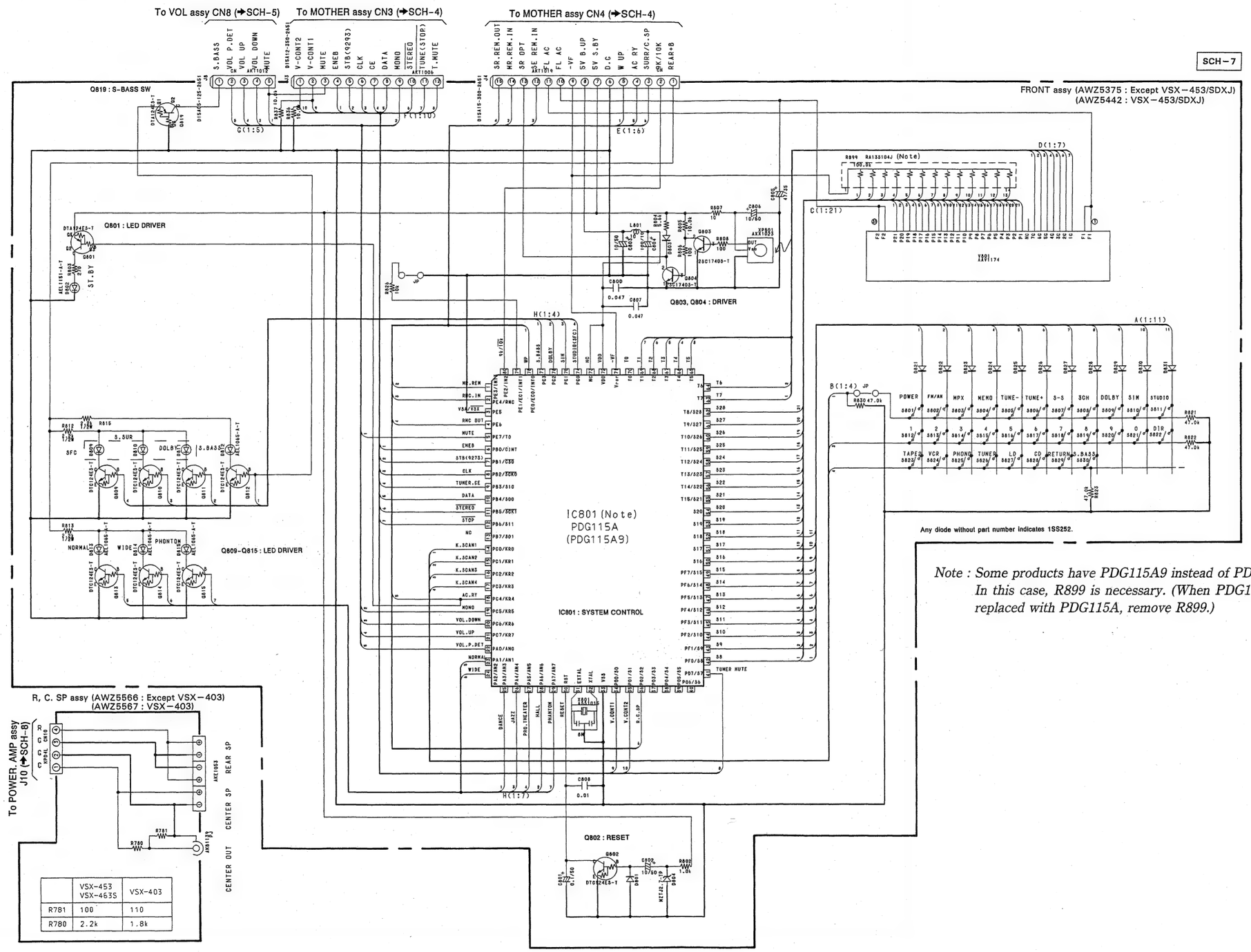

Note : Some products have PDG115A9 instead of PDG115A. In this case, R899 is necessary. (When PDG115A9 is replaced with PDG115A, remove R899.)

PCB – 6

• This diagram is viewed from the mounted parts side.

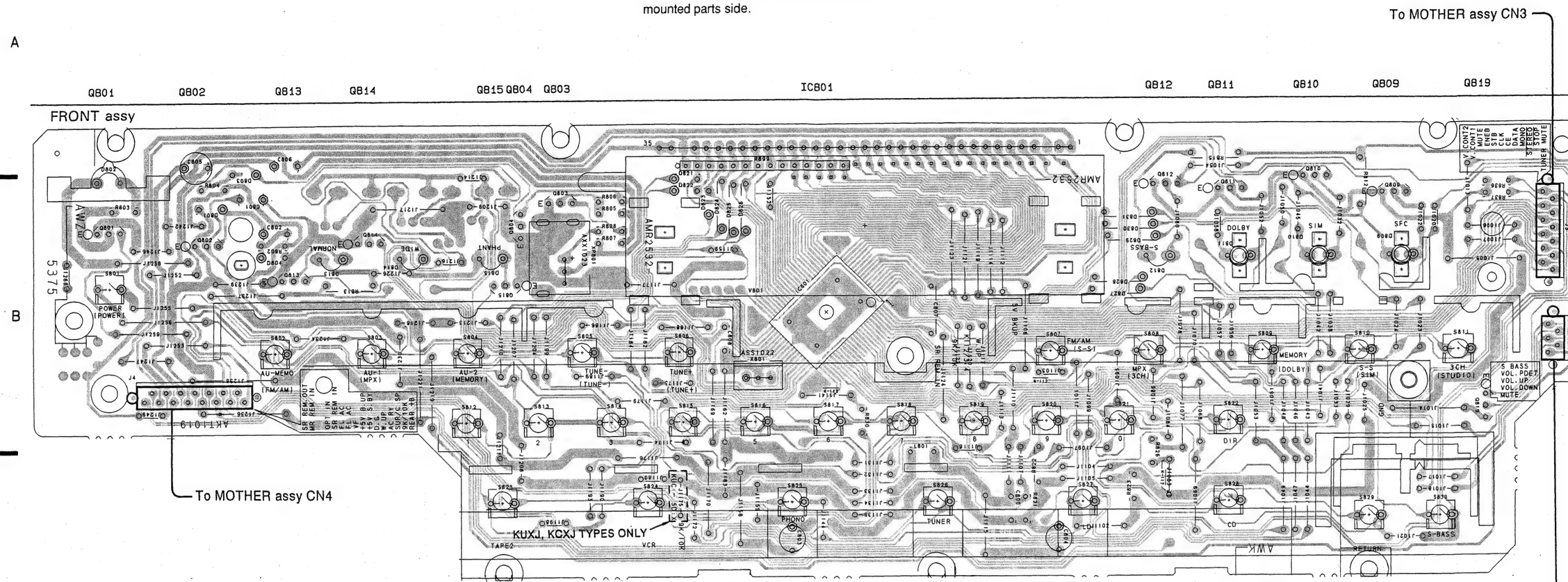

Note : Concerning R899, refer to "Note" in page 34.

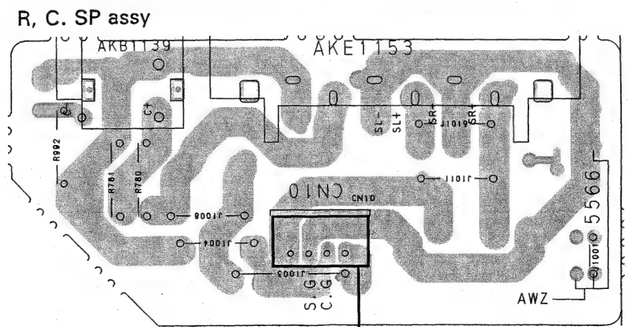

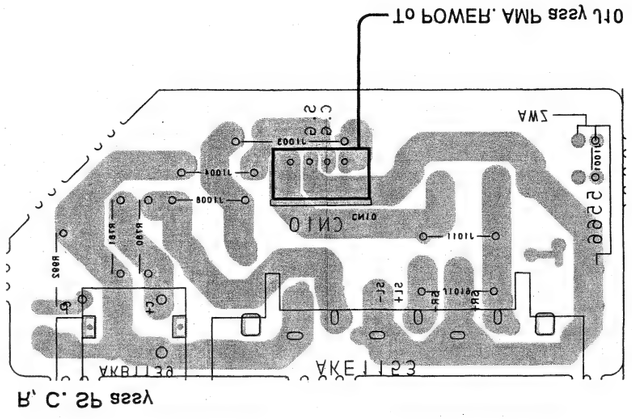

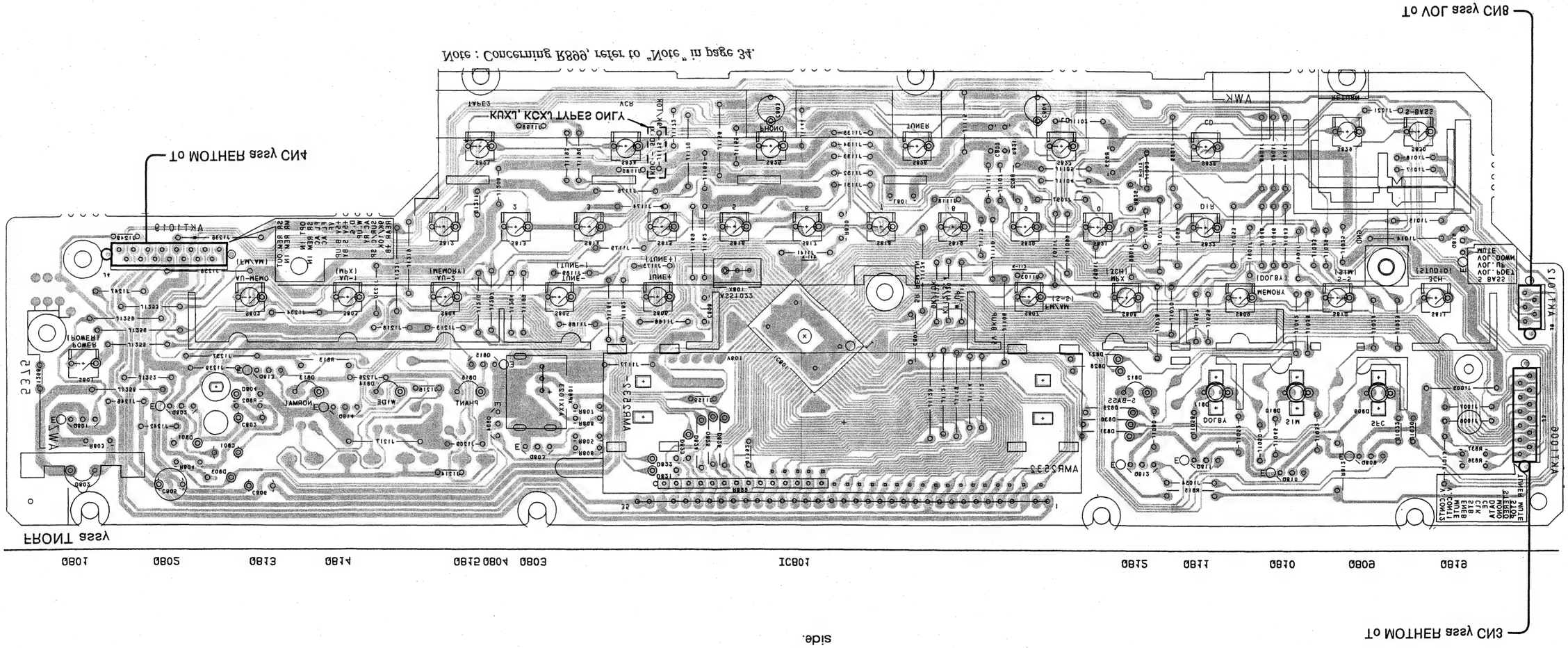

● This diagram is viewed from the foil side.

8.8 POWER. AMP ASSY

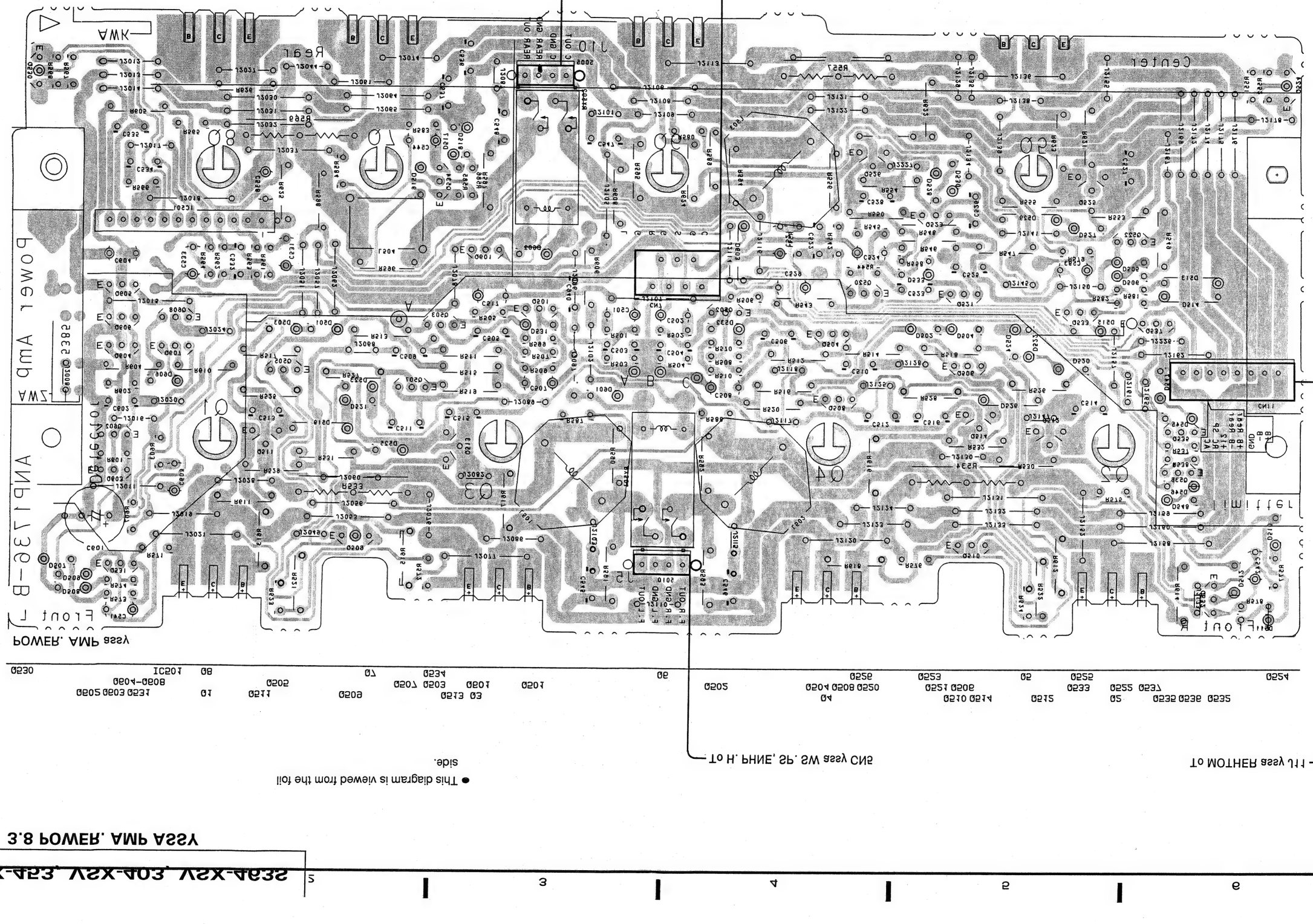

3.8 POWER. AMP ASSY

- This diagram is viewed from the mounted parts side.

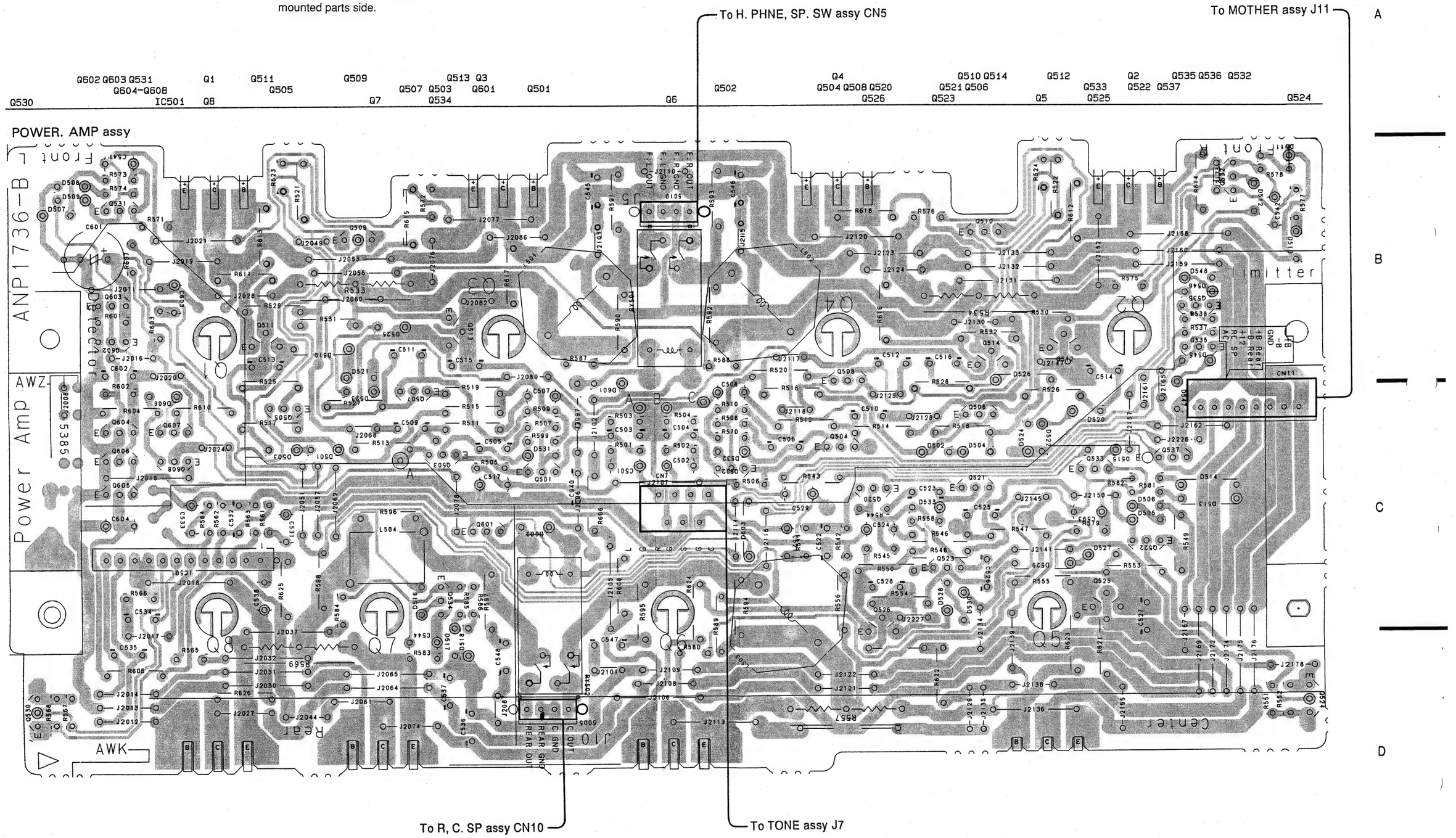

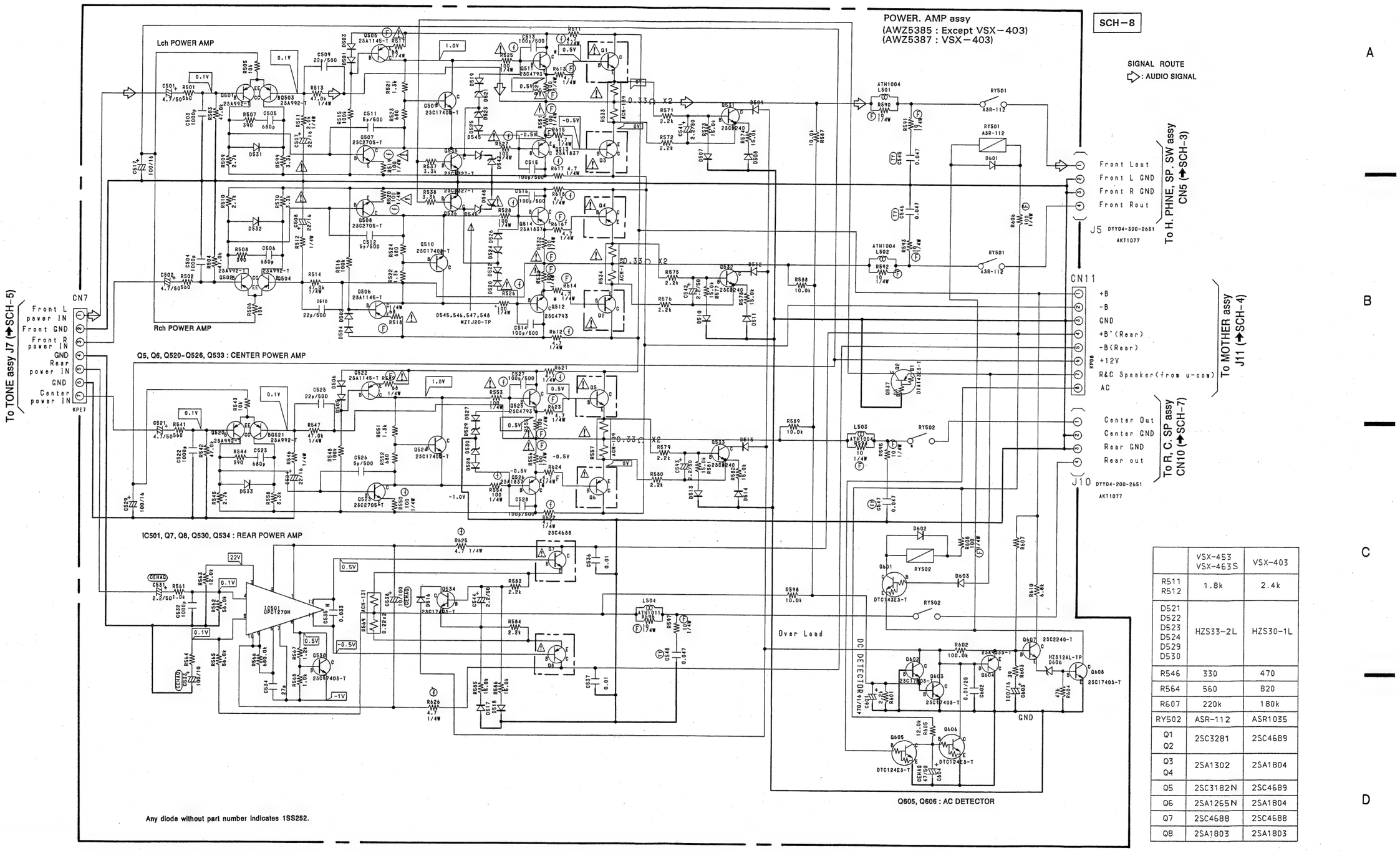

	VSX-453 VSX-463S	VSX-403
R511 R512	1.8k	2.4k
D521 D522 D523 D524 D529 D530	HZS33-2L	HZS30-1L
R546	330	470
R564	560	820
R607	220k	180k
RY502	ASR-112	ASR1035
Q1 Q2	2SC3281	2SC4689
Q3 Q4	2SA1302	2SA1804
Q5	2SC3182N	2SC4689
Q6	2SA1265N	2SA1804
Q7	2SC4688	2SC4688
Q8	2SA1803	2SA1803

4. PCB PARTS LIST

NOTES :

- *Parts marked by "NSP" are generally unavailable because they are not in our Master Spare Parts List.*
- *The ⚠ mark found on some component parts indicates the importance of the safety factor of the part. Therefore, when replacing, be sure to use parts of identical designation.*
- *Parts marked by "◉" are not always kept in stock. Their delivery time may be longer than usual or they may be unavailable.*
- *When ordering resistors, first convert resistance values into code form as shown in the following examples.*

Ex. 1 When there are 2 effective digits (any digit apart from 0), such as 560 ohm and 47k ohm (tolerance is shown by J = 5%, and K = 10%).

560Ω → 56 × 10¹ → 561 ····· RD1/8PM 5 6 1 J
47kΩ → 47 × 10³ → 473 ····· RD1/4PS 4 7 3 J
0.5Ω → 0R5 ····· RN2H 0 R 5 K
1Ω → 010 ····· RS1P 0 1 0 K

Ex. 2 When there are 3 effective digits (such as in high precision metal film resistors).

5.62kΩ → 562 × 10¹ → 5621 ····· RM1/4PC 5 6 2 1 F

Mark	No.	Description	Parts No.
LIST OF ASSEMBLIES			
NSP		MAIN ASSY (For VSX−453/KUXJ, KCXJ and VSX−463S/KCXJ)	AWK1781
NSP		MAIN ASSY (For VSX−453/SDXJ)	AWK1807
NSP		MAIN ASSY (For VSX−403/KUXJ and KCXJ)	AWK1783
		— REG. ASSY	AWZ5373
		— FRONT ASSY (Except VSX−453/SDXJ)	AWZ5375
		— FRONT ASSY (For VSX−453/SDXJ)	AWZ5442
		— MOTHER ASSY (For VSX−453/KUXJ, KCXJ and VSX−463S/KCXJ)	AWZ5376
		— MOTHER ASSY (For VSX−453/SDXJ	AWZ5443
		— MOTHER ASSY (For VSX−403/KUXJ and KCXJ	AWZ5377
		— R, C. SP ASSY (Except VSX−403/KUXJ and KCXJ)	AWZ5566
		— R, C. SP ASSY (For VSX−403/KUXJ and KCXJ)	AWZ5567
NSP		AMP/FUNC ASSY (Except VSX−403/KUXJ and KCXJ)	AWK1782
NSP		AMP/FUNC ASSY (For VSX−403/KUXJ and KCXJ)	AWK1784
		— FUNC ASSY	AWZ5379
		— TRANS ASSY	AWZ5380
		— VIDEO ASSY	AWZ5381
		— TONE ASSY	AWZ5382
		— H. PHNE, SP. SW ASSY	AWZ5384
		— POWER. AMP ASSY (Except VSX−403/KUXJ and KCXJ)	AWZ5385
		— POWER. AMP ASSY (For VSX−403/KUXJ and KCXJ)	AWZ5387
		— VOL ASSY	AWZ5386
		FM/AM TUNER MODULE	AXQ3112
		DOL. PRO. MOD. ASSY	AXQ3121

For AWZ5375 and AWZ5442:
Although AWZ5375 and AWZ5442 are different in part number, they consist of the same service parts.

Mark	No.	Description	Parts No.
REG. ASSY			
SEMICONDUCTORS			
	IC701	REGULATOR IC	NJM78M12FAS
	IC702	REGULATOR IC	NJM79M12FA
	IC703	REGULATOR IC	NJM78M12FAS
CAPACITORS			
	C707	ELECT. CAPACITOR	CEAS101M25
	C708	ELECT. CAPACITOR	CEHAQ101M25
	C709	ELECT. CAPACITOR	CEAS101M25
	C710−712	CERAMIC CAPACITOR	CKCYF103Z50
FRONT ASSY			
SEMICONDUCTORS			
	IC801	CONTROL MCU	PDG115A (PDG115A9) Note
	Q801	TRANSISTOR	DTA124ES
	Q802	TRANSISTOR	DTC124ES
	Q803, 804	TRANSISTOR	2SC1740S
	Q809−815	TRANSISTOR	DTC124ES
	Q819	TRANSISTOR	DTA124ES
	D801	DIODE	1SS252
	D802	LED (RED)	AEL1151
	D803	DIODE	1SS252
	D804	ZENER DIODE	MTZJ2.7
	D809−815	LED (RED)	AEL1065
	D821−831	DIODE	1SS252
SWITCHES			
	S801−830	SWITCH	ASG1029
COILS			
	L801	AXIAL INDUCTOR	LAU100K
CAPACITORS			
	C800	CERAMIC CAPACITOR	CKPUYF473Z16
	C801	ELECT. CAPACITOR	CEAS0R1M50
	C802, 803	ELECT. CAPACITOR	CEAS100M50
	C804	ELECT. CAPACITOR	CEAS101M10
	C805	ELECT. CAPACITOR	CEAS470M35
	C806	ELECT. CAPACITOR	CEAS100M50
	C807	CERAMIC CAPACITOR	CKPUYF473Z16
	C808	CERAMIC CAPACITOR	CKCYF103Z50

Mark	No.	Description	Parts No.
RESISTORS			
	R812, 813	CARBON FILM RESISTOR	RD1/2PM222J
	R815	CARBON FILM RESISTOR	RD1/2PM222J
	(R899	RESISTOR ARRAY	RA13S104J) Note
		OTHER RESISTORS	RD1/8PM□□□J
OTHERS			
	V801	FL TUBE	AAV1174
	X801	CRYSTAL RESONATOR	ASS1015
		REMOTE RECEIVER UNIT	AXX1023

Note : Concerning IC801 and R899, refer to page 34.

Mark	No.	Description	Parts No.
MOTHER ASSY			
SEMICONDUCTORS			
	Q709	TRANSISTOR	2SA933S
	Q710	TRANSISTOR (Except VSX−403)	DTC124ES
	Q751	TRANSISTOR	DTC143ES
	D702−706	DIODE	1SS252
	D707	DIODE (Except VSX−403)	1SS252
	D709	ZENER DIODE	HZS6B2L
	D710	ZENER DIODE	MTZJ4.3C
	D711	ZENER DIODE	MTZJ22C
⚠	D712	DIODE	D5SB20F
	D713, 715	DIODE (Except VSX−403)	1SS252
	D716	DIODE (Except VSX−403)	1SS252
	D752	DIODE	S5688G
	D753	ZENER DIODE	HZS6A2L
	D754	DIODE	1SS252
	D755	DIODE	S5688G
	D756	ZENER DIODE	HZS6A2L
	D757	DIODE	1SS252
SWITCH			
	S701	SWITCH (VSX−453/SDXJ only)	ASR1044
RELAY			
⚠	RY751	RELAY	ASR1044
COILS			
⚠	T751	POWER TRANSFORMER (Except VSX−453/SDXJ)	ATT1223
⚠	T751	POWER TRANSFORMER (For VSX−453/SDXJ)	ATT1193
CAPACITORS			
	C704	CAPACITOR	ACH1246
	C705	ELECT. CAPACITOR	CEAS470M16
	C713, 714	ELECT. CAPACITOR (8200/71) (Except VSX−403)	ACH1204
	C713, 714	ELECT. CAPACITOR (8200/63) (For VSX−403)	ACH1044
	C715, 716	CEA (3300/42V)	ACH1255
⚠	C717	CKA (0.01/AC250V)	ACG1005
	C751	CERAMIC CAPACITOR	CKCYX104M25
	C752	ELECT. CAPACITOR	CEAS471M25
	C753	ELECT. CAPACITOR	CEAS470M10
⚠	C754	CKA (0.01/AC400V)	ACG1054
⚠	C755	CKA (0.01/AC400V) (Except VSX−453/SDXJ)	ACG1054
⚠	C755	CKA (0.022/AC400V) (For VSX−453/SDXJ)	ACG1030

Mark	No.	Description	Parts No.
RESISTORS			
	R700	FUSIBLE RESISTOR	RFA1/4PS4R7J
	R715	CARBON FILM RESISTOR (Except VSX−403)	RD1/8PM224J
	R717	CARBON FILM RESISTOR (Except VSX−403)	RD1/8PM562J
	R721, 724	CARBON FILM RESISTOR (Except VSX−403)	RD1/8PM102J
	R729	METAL OXIDE RESISTOR	RS1LMF101J
	R730	METAL OXIDE RESISTOR	RS2LMF472J
	R731	METAL OXIDE RESISTOR	RS2LMF472J
	R732	CARBON FILM RESISTOR	RD1/4PMF4R7J
	R733, 734	METAL OXIDE RESISTOR	RS2LMF330J
	R735	METAL OXIDE RESISTOR	RS1LMF150J
	R751	METAL OXIDE RESISTOR	RS2LMF221J
	R752	CARBON FILM RESISTOR	RD1/2PM470J
⚠	R756	RESISTOR (2.2M, 1/2W) (Except VSX−453/SDXJ)	ACN−208
	R757	CARBON FILM RESISTOR (VSX−453/SDXJ only)	RD1/8PM472J
	R759	METAL OXIDE RESISTOR	RS1LMF561J
		OTHER RESISTORS	RD1/8PM□□□J
OTHERS			
		CABLE HOLDER (6P)	AKT1079
		CABLE HOLDER (8P)	AKT1081
		SPEAKER TERMINAL 8−P	AKE−111
		JACK	AKN1020
	CN3	CONNECTOR (12P)	KPE12
	CN4	CONNECTOR (15P)	KPE15
	CN711	14P PLUG	KM200IB14
	CN721	20P PLUG	KM200IB20
	CN741	4P PLUG	KM200IB4
	CN791	15P PLUG	KM200IB15
	CN8005	JACK	AKN1006
⚠	CN8008	AC INLET (1P) (Except VSX−453/SDXJ)	AKP1124
⚠	CN8008	AC INLET (1P) WITH OUTLET (For VSX−453/SDXJ)	AKP1123
	CN9	CONNECTOR (11P)	KPE11
FUNC ASSY			
SEMICONDUCTORS			
	IC201	OP−AMP IC	NJM4558DXP
	IC203	ANALOG SWITCH IC	TC9273N−005
	IC204, 205	OP−AMP IC	NJM4558DXP
	Q201, 202	TRANSISTOR	2SC2878
	Q203	TRANSISTOR	DTA143ES
CAPACITORS			
	C201	CERAMIC CAPACITOR	CKCYF103Z50
	C202	ELECT. CAPACITOR	CEAS010M50
	C203, 204	ELECT. CAPACITOR	CEAS100M50
	C205, 206	CERAMIC CAPACITOR	CCCSL221J50
	C207, 208	ELECT. CAPACITOR	CEAS101M16
	C209, 210	PLASTIC FILM CAPACITOR	CQMA822J50
	C211, 212	PLASTIC FILM CAPACITOR	CQMA242J50
	C213, 214	ELECT. CAPACITOR	CEAS2R2M50
	C215, 216	ELECT. CAPACITOR	CEAS100M50
	C217, 218	CERAMIC CAPACITOR	CKCYB102K50
	C221, 222	CERAMIC CAPACITOR	CKCYF103Z50
	C223, 224	ELECT. CAPACITOR	CEAS2R2M50
	C225, 226	ELECT. CAPACITOR	CEAS4R7M50
	C227, 228	ELECT. CAPACITOR	CEAS2R2M50
	C231, 232	ELECT. CAPACITOR	CEAS4R7M50

Mark	No.	Description	Parts No.
RESISTORS			
		ALL RESISTORS	RD1/8PM□□□J
OTHERS			
	CN201	20P SOCKET	KP200IB20L
	CN8004	PIN JACK (6P)	AKB1209
	CN8005	PIN JACK (8P)	AKB1210

TRANS ASSY

SEMICONDUCTORS			
	D681, 682	DIODE	S5688G
	D683	DIODE	D3SBA20 (A)
CAPACITORS			
	C681	CKA (0.01/AC250V)	ACG1005
RESISTORS			
	R681	FUSIBLE RESISTOR	RFA1/4PS220J
OTHERS			
	CN1	CONNECTOR (7P)	KPE7

VIDEO ASSY

SEMICONDUCTORS			
	IC401	VIDEO SWITCH	LA7952
	Q401	TRANSISTOR	2SC1740S
	Q402	TRANSISTOR	2SC2878
	Q403	TRANSISTOR	2SC1740S
	D401	DIODE	1SS252
CAPACITORS			
	C401, 402	ELECT. CAPACITOR	CEAS4R7M50
	C403, 404	ELECT. CAPACITOR	CEAS471M6
	C405	ELECT. CAPACITOR	CEAS101M16
	C406	CERAMIC CAPACITOR	CKCYF473Z50
	C408	ELECT. CAPACITOR	CEAS101M16
	C409	CERAMIC CAPACITOR	CKCYF473Z50
	C410	ELECT. CAPACITOR	CEAS470M16
	C411	ELECT. CAPACITOR	CEAS101M16
	C412	CERAMIC CAPACITOR	CKCYF473Z50
RESISTORS			
	R407, 411	CARBON FILM RESISTOR	RD1/4PM151J
	R412, 413	CARBON FILM RESISTOR	RD1/2PM271J
		OTHER RESISTORS	RD1/8PM□□□J
OTHERS			
	CN401	4P SOCKET	KP200IB4L
	CN8008	PIN JACK (4P)	AKB1218

TONE ASSY

SEMICONDUCTORS			
	IC301	OP−AMP IC	NJM4558LD
	Q301, 302	TRANSISTOR	2SC2878
	Q304	TRANSISTOR	DTA143ES
	Q305, 306	TRANSISTOR	2SC2878
CAPACITORS			
	C301, 302	ELECT. CAPACITOR	CEAS4R7M50
	C303, 304	ELECT. CAPACITOR	CEAS010M50
	C305, 306	ELECT. CAPACITOR	CEAS2R2M50
	C307, 308	CERAMIC CAPACITOR	CCCSL220J50
	C309, 310	ELECT. CAPACITOR	CEAS100M50
	C311, 312	AUDIO FILM CAPACITOR	CFTYA103J50
	C313, 314	AUDIO FILM CAPACITOR	CFTYA393J50
	C315, 316	PLASTIC FILM CAPACITOR	CQMA272J50
	C317, 318	AUDIO FILM CAPACITOR	CFTYA103J50
RESISTORS			
	VR301	VARIABLE RESISTOR (500kΩ)	ACS1091
	VR302, 303	VARIABLE RESISTOR (100kΩ)	ACS1044
		OTHER RESISTORS	RD1/8PM□□□J
OTHERS			
		SHIELD CASE (MTL)	ANK1250
	CN1381	10P PLUG	KM200IB10

H. PHNE, SP. SW ASSY

SWITCH			
	S670	PUSH SWITCH	SUL6LYXS
RESISTORS			
	R671, 672	METAL OXIDE RESISTOR	RS2LMF331J
OTHERS			
		JACK	AKN1002

POWER AMP ASSY

SEMICONDUCTORS			
	IC501	PRE-DRIVER−IC	UPC1270H
	Q501−504	TRANSISTOR	2SA992
	Q505, 506	TRANSISTOR	2SA1145
	Q507, 508	TRANSISTOR	2SC2705
	Q509, 510	TRANSISTOR	2SC1740S
	Q511, 512	TRANSISTOR	2SC4793
	Q513, 514	TRANSISTOR	2SA1837
	Q520, 521	TRANSISTOR	2SA992
	Q522	TRANSISTOR	2SA1145
	Q523	TRANSISTOR	2SC2705
	Q524	TRANSISTOR	2SC1740S
	Q525	TRANSISTOR	2SC4793
	Q526	TRANSISTOR	2SA1837
	Q530	TRANSISTOR	2SC1740S
	Q531−533	TRANSISTOR	2SC2240
	Q534	TRANSISTOR	2SC1740S
	Q535, 536	TRANSISTOR	2SC3327
	Q537	TRANSISTOR	DTA143ES
	Q601	TRANSISTOR	DTC143ES
	Q602, 603	TRANSISTOR	2SC1740S
	Q604	TRANSISTOR	2SA933S
	Q605, 606	TRANSISTOR	DTC124ES
	Q607	TRANSISTOR	2SC2240
	Q608	TRANSISTOR	2SC1740S
	D501−520	DIODE	1SS252
	D521−524	ZENER DIODE (Except VSX−403)	HZS33−2L
	D521−524	ZENER DIODE (For VSX−403)	HZS33−1L
	D525−528	DIODE	1SS252
	D529, 530	ZENER DIODE (Except VSX−403)	HZS33−2L
	D529, 530	ZENER DIODE (For VSX−403)	HZS33−2L
	D531−533	DIODE	1SS252
	D545−548	ZENER DIODE	MTZJ20
	D601−603	DIODE	1SS252
	D606	ZENER DIODE	HZS12AL

Mark	No.	Description	Parts No.
RELAYS			
	RY501	RELAY	ASR−112
	RY502	RELAY (Except VSX−403)	ASR−112
	RY502	RELAY (For VSX−403)	ASR1035
COILS			
	L501−503	COIL	ATH1004
	L504	COIL	ATH1011
CAPACITORS			
	C501, 502	ELECT. CAPACITOR	CEAS4R7M50
	C503, 504	CERAMIC CAPACITOR	CKCYB102K50
	C505, 506	CERAMIC CAPACITOR	CKCYB681K50
	C507, 508	ELECT. CAPACITOR	CEAS220M16
	C509, 510	CERAMIC CAPACITOR	CCCSL220K500
	C511, 512	CERAMIC CAPACITOR	CCCSL050C500
	C513−516	CERAMIC CAPACITOR	CCCSL101K500
	C517	ELECT. CAPACITOR	CEAS101M16
	C521	ELECT. CAPACITOR	CEAS4R7M50
	C522	CERAMIC CAPACITOR	CKCYB102K50
	C523	CERAMIC CAPACITOR	CKCYB681K50
	C524	ELECT. CAPACITOR	CEAS220M16
	C525	CERAMIC CAPACITOR	CCCSL220K500
	C526	CERAMIC CAPACITOR	CCCSL050C500
	C527, 528	CERAMIC CAPACITOR	CCCSL101K500
	C529	ELECT. CAPACITOR	CEAS101M16
	C531	ELECT. CAPACITOR	CEHAQ2R2M50
	C532	CERAMIC CAPACITOR	CKCYB102K50
	C533	ELECT. CAPACITOR	CEHAQ101M10
	C534	CERAMIC CAPACITOR	CCCSL270J50
	C535	PLASTIC FILM CAPACITOR	CQMA333J50
	C536, 537	CERAMIC CAPACITOR	CKCYF103Z50
	C538	ELECT. CAPACITOR	CEHAQ100M2A
	C541, 542	ELECT. CAPACITOR	CEAS2R2M50
	C544	ELECT. CAPACITOR	CEAS2R2M50
	C545−548	AUDIO FILM CAPACITOR	CFTYA473J50
	C593	ELECT. CAPACITOR	CEAS2R2M50
	C601	ELECT. CAPACITOR	CEAS471M16
	C602	CERAMIC CAPACITOR	CKCYX103M25
	C603	ELECT. CAPACITOR	CEAS101M16
	C604	ELECT. CAPACITOR	CEHAQ470M50
RESISTORS			
	R511, 512	CARBON FILM RESISTOR (Except VSX−403)	RD1/4PM182J
	R511, 512	CARBON FILM RESISTOR (For VSX−403)	RD1/4PM242J
	R513, 514	CARBON FILM RESISTOR	RD1/4PM473J
	R515, 516	CARBON FILM RESISTOR	RD1/4PM104J
	R517, 518	CARBON FILM RESISTOR	RD1/4PMF680J
	R519, 520	FUSIBLE RESISTOR	RFA1/4PS101J
	R525−528	FUSIBLE RESISTOR	RFA1/4PS101J
	R529−532	CARBON FILM RESISTOR	RD1/4PMF101J
	R533, 534	RESISTOR (0.33, 5W)	ACN−139
	R546	CARBON FILM RESISTOR (Except VSX−403)	RD1/4PM331J
	R546	CARBON FILM RESISTOR (For VSX−403)	RD1/4PM471J
	R547	CARBON FILM RESISTOR	RD1/4PM473J
	R548	CARBON FILM RESISTOR	RD1/4PM104J
	R549	CARBON FILM RESISTOR	RD1/4PMF680J
	R550, 553	FUSIBLE RESISTOR	RFA1/4PS101J
	R554	FUSIBLE RESISTOR	RFA1/4PS101J
	R555, 556	CARBON FILM RESISTOR	RD1/4PMF101J
	R557	RESISTOR (0.33, 5W)	ACN−139
	R569	RESISTOR (0.22, 2W)	ACN−131
	R590−597	CARBON FILM RESISTOR	RD1/4PMF100J
	R606, 608	CARBON FILM RESISTOR	RD1/4PMF101J
	R611, 612	FUSIBLE RESISTOR	RFA1/4PS4R7J
	R613−616	CARBON FILM RESISTOR	RD1/4PMF4R7J
	R617, 618	FUSIBLE RESISTOR	RFA1/4PS4R7J
	R621, 622	FUSIBLE RESISTOR	RFA1/4PS4R7J
	R623, 624	CARBON FILM RESISTOR	RD1/4PMF4R7J
	R625, 626	FUSIBLE RESISTOR	RFA1/4PS4R7J
	R564	CARBON FILM RESISTOR (Except VSX−403)	RD1/8PM561J
	R564	CARBON FILM RESISTOR (For VSX−403)	RD1/8PM821J
	R607	CARBON FILM RESISTOR (Except VSX−403)	RD1/8PM224J
	R607	CARBON FILM RESISTOR (For VSX−403)	RD1/8PM184J
		OTHER RESISTORS	RD1/8PM□□□J
OTHERS			
		CABLE HOLDER (4P)	AKT1077
	CN7	CONNECTOR (7P)	KPE7

VOL ASSY

Mark	No.	Description	Parts No.
SEMICONDUCTORS			
	IC304	OP−AMP IC	NJM4558DXP
	IC381	MECHANISM DRIVER IC	TA8409S
	IC382	OP−AMP IC	NJM4558DXP
	Q381, 382	TRANSISTOR	DTC143ES
COILS			
	L381, 382	AXIAL INDUCTOR	LAU220K
CAPACITORS			
	C355, 356	ELECT. CAPACITOR	CEAS4R7M50
	C359, 360	ELECT. CAPACITOR	CEAS4R7M50
	C381	ELECT. CAPACITOR	CEAS470M16
	C383, 384	CERAMIC CAPACITOR	CKCYF473Z50
	C385, 386	ELECT. CAPACITOR	CEAS2R2M50
	C387, 388	AUDIO FILM CAPACITOR	CFTYA153J50
	C389, 390	AUDIO FILM CAPACITOR	CFTYA823J50
	C391, 392	ELECT. CAPACITOR	CEAS4R7M50
RESISTORS			
	VR381	VARIABLE RESISTOR (100kΩ)	ACX1093
		OTHER RESISTORS	RD1/8PM□□□J
OTHERS			
	CN381	10P SOCKET	KP200IB10L
	CN8	CONNECTOR (5P)	KPE5

R, C. SP ASSY

Mark	No.	Description	Parts No.
RESISTORS			
	R780	CARBON FILM RESISTOR (Except VSX−403)	RD1/8PM222J
	R780	CARBON FILM RESISTOR (For VSX−403)	RD1/8PM182J
	R781	CARBON FILM RESISTOR (except VSX−403)	RD1/8PM101J
	R781	CARBON FILM RESISTOR (For VSX−403)	RD1/8PM111J
OTHERS			
	CN780	PIN JACK 1−P	AKB1139
	CN781	SPEAKER TERMINAL 6−P	AKE1053

Mark	No.	Description	Parts No.
FM/AM TUNER MODULE			
SEMICONDUCTORS			
	IC6201	AM/FM +MPX IC	LA1836M
	IC6202	PLL IC	LM7001J
	Q6101	DUALGATE−FETA (CHIP)	3SK194
	Q6102	TRANSISTOR	2SC2223
	Q6103	TRANSISTOR	2SC2714
	Q6104	MOS−FET	2SK302
	Q6201	NCH−FET (SMD)	2SK208
	Q6202	TRANSISTOR	2SC2712
	Q6203	TRANSISTOR	2SC2235
	Q6204	TRANSISTOR	XDA124EK
	Q6214	TRANSISTOR	2SC2714
	Q6217	TRANSISTOR	XDC124EK
	D6101, 6102	VARI−CAP DIODE	1T33
COILS AND TRANSFORMER			
	F6101	CERAMIC FILTER	ATF−155
	F6202	AM CERAMIC FILTER	ATF1155
	F6203, 6204	CERAMIC FILTER	ATF−119
	L6101	COIL	ATC1020
	L6102	COIL	ATC1021
	L6103	TIP COIL	ATH1043
	L6104	COIL	ATC1003
	L6202, 6203	CHIP COIL	LCTA2R2J3225
	L6207	FM DETECTION COIL	ATE1013
	L6208	CHIP COIL	LCTA2R2J3225
	T6101	FM IF TRANS.	ATE−063
CAPACITORS			
	C6101	CHIP CAPACITOR	CCSQCH050C50
	C6102	CERAMIC CAPACITOR	CKSQYB103K50
	C6103	CHIP CAPACITOR	CKSQYB102K50
	C6105	CHIP CAPACITOR	CCSQTH150J50
	C6106	CHIP CAPACITOR	CKSQYB102K50
	C6107	CHIP CPAPCITOR	CCSCH010C50
	C6108	CHIP CAPACITOR	CCSQCH101J50
	C6109	CERAMIC CAPACITOR	CKSQYB103K50
	C6110	CHIP CAPACITOR	CCSQCH020C50
	C6111	CHIP CERAMIC C.	CCSQCH150J50
	C6112	CHIP CAPACITOR	CKSQYB102K50
	C6113	CHIP CAPACITOR	CCSQRH180J50
	C6114	CHIP CAPACITOR	CCSQRH080D50
	C6115	CHIP CAPACITOR	CCSQCH330J50
	C6116	CHIP CERAMIC C.	CCSQCH150J50
	C6117	CERAMIC CAPACITOR	CKSQYB103K50
	C6202	CERAMIC CAPACITOR	ACG1051
	C6203	CHIP CAPACITOR	CCSQCH101J50
	C6204	CHIP CAPACITOR	CKSQYB102K50
	C6208	CHIP CERAMIC C.	CCSQCH150J50
	C6209	CERAMIC CAPACITOR	CKSQYB473K50
	C6210	CERAMIC CAPACITOR	CKSQYB103K50
	C6212	CHIP CAPACITOR	CKSQYF103Z50
	C6213	CHIP CAPACITOR	CKSQYB223K50
	C6214	AUDIO FILM CAPACITOR	CFTXA224J50
	C6215	AUDIO FILM CAPACITOR	CFTXA103J50
	C6216, 6217	ELECT. CAPACITOR	CEAS330M16
	C6218	CHIP CAPACITOR	CKSQYF103Z50
	C6219	ELECT. CAPACITOR	CEAS470M10
	C6220	CHIP CAPACITOR	CKSQYF223Z50
	C6221, 6222	CHIP CERAMIC C.	CCSQCH150J50
	C6223	CHIP CAPACITOR	CKSYF103Z50
	C6224	ELECT. CAPACITOR	CEAS100M50
	C6225	CERAMIC CAPACITOR	CKSQYF473Z50
	C6226	CHIP CAPACITOR	CKSQYF223Z50
	C6227	ELECT. CAPACITOR	CEAS470M25
	C6228	CERAMIC CAPACITOR	CKSQYB472K50
	C6229	CERAMIC CHIP C.	CCSCH821J50
	C6230	CERAMIC CAPACITOR	CKSQYB333K50
	C6231	ELECT. CAPACITOR	CEAS100M50
	C6232	CERAMIC CAPACITOR	CKSYB333K50
	C6233	ELECT. CAPACITOR	CEAS100M50
	C6234	CERAMIC CAPACITOR	ACG1051
	C6235	CERAMIC CAPACITOR	ACG1052
	C6236	CERAMIC CAPACITOR	ACG1051
	C6237	CERAMIC CAPACITOR	CKSQYB473K50
	C6238	ELECT. CAPACITOR	CEJA100M16
	C6239	CHIP CAPACITOR	CKSQYF223Z50
	C6241	CERAMIC CAPACITOR	CKSQYF473Z50
	C6242	CHIP CAPACITOR	CKSQYF223Z50
	C6243−6245	ELECT. CAPACITOR	CEAS470M16
	C6246	ELECT. CAPACITOR	CEAS100M50
	C6249, 6250	ELECT. CAPACITOR	CEJA4R7M35
	C6251	CHIP CAPACITOR	CKSYB472K50
	C6252	CERAMIC CAPACITOR	CKSQYB472K50
	C6255	CHIP CAPACITOR	CKSQYF223Z50
	C6261	ELECT. CAPACITOR	CEAS010M50
	C6262	ELECT. CAPACITOR	CEAS100M50
	C6263	CHIP CAPACITOR	CKSYF473Z50
	C6264	CERAMIC CAPACITOR	CKSQYB103K50
	C6265	CERAMIC CAPACITOR	CKSQYB473K50
	C6266	CERAMIC CAPACITOR	CKSQYF473Z50
	C6267	CERAMIC CAPACITOR	CKSQYB473K50
	C6268	CHIP CAPACITOR	CCSQCH101J50
RESISTORS			
	VR6201	VARIABLE RESISTOR (10kΩ)	ACP1056
	VR6202	VARIABLE RESISTOR (22kΩ)	VRTB6VS223
	R6101	CHIP RESISTOR	RS1/8S470J
	R6113, 6116	CHIP RESISTOR	RS1/8S000J
	R6118	CHIP RESISTOR	RS1/8S000J
	R6209	CHIP RESISTOR	RS1/8S221J
	R6211	CHIP RESISTOR	RS1/8S103J
	R6237	CHIP RESISTOR	RS1/8S182J
	R6239	CHIP RESISTER	RS1/8S332J
	R6243, 6244	CHIP RESISTOR	RS1/8S101J
	R6268−6271	CHIP RESISTOR	RS1/8S000J
	R6275, 6276	CHIP RESISTOR	RS1/8S000J
	R6278, 6283	CHIP RESISTOR	RS1/8S000J
	R6284, 6290	CHIP RESISTOR	RS1/8S000J
	R6293, 6294	CHIP RESISTOR	RS1/8S000J
	R6297	CHIP RESISTOR	RS1/8S000J
	R6299, 6300	CARBON FILM RESISTOR	RD1/8PM102J
		OTHER RESISTORS	RS1/10S□□□J
OTHERS			
		AM RF TUNING BLOCK	AXX1025
	BN6201	TERMINAL 4−P	AKA1016
	X6201	CRYSTAL RESONATOR	ASS1066
	X6202	CERAMIC RESONATOR	ATF1027
	X6203	CRYSTAL RESONATOR	ASS1042
DOL. PRO. MOD. ASSY			
SEMICONDUCTORS			
	IC1801, 1802	OP−AMP IC	NJM4558M−D
	IC1803	IC	LV1010NA
	IC1804	IC	LA2785
	Q1801	TRANSISTOR	2SD468
	D1801	ZENER DIODE	RD10MB
	D1802−1810	DIODE	1SS226

Mark	No.	Description	Parts No.
CAPACITORS			
	C1801−1803	CHIP CAPACITOR	CCSQCH101J50
	C1804	ELECT. CAPACITOR	CEAS2R2M50
	C1805	ELECT. CAPACITOR	CEAS220M16
	C1806	ELECT. CAPACITOR	CEAS100M50
	C1807	ELECT. CAPACITOR	CEAS2R2M50
	C1808	ELECT. CAPACITOR	CEAS220M16
	C1809	ELECT. CAPACITOR	CEAS100M50
	C1810	ELECT. CAPACITOR	CEAS2R2M50
	C1811	ELECT. CAPACITOR	CEAS220M16
	C1812	ELECT. CAPACITOR	CEAS100M50
	C1813	ELECT. CAPACITOR	CEAS2R2M50
	C1814	ELECT. CAPACITOR	CEAS220M16
	C1815	ELECT. CAPACITOR	CEAS100M50
	C1816	ELECT. CAPACITOR	CEAS470M16
	C1817	ELECT. CAPACITOR	CEAS221M16
	C1818	CERAMIC CAPACITOR	CKSQYF104Z50
	C1819	ELECT. CAPACITOR	CEAS221M10
	C1820	AUDIO FILM CAPACITOR	CFTYA333J50
	C1821	PLASTIC FILM CAPACITOR	CQMA152J50
	C1822	AUDIO FILM CAPACITOR	CFTYA333J50
	C1823	ELECT. CAPACITOR	CEAS010M50
	C1824	ELECT. CAPACITOR	CEAS221M16
	C1825	ELECT. CAPACITOR	CEAS2R2M50
	C1826	ELECT. CAPACITOR	CEAS100M50
	C1830	PLASTIC FILM CAPACITOR	CQMA681J50
	C1831−1833	ELECT. CAPACITOR	CEAS100M50
	C1834	ELECT. CAPACITOR	CEAS470M10
	C1835, 1836	AUDIO FILM CAPACITOR	CFTYA104J50
	C1837	ELECT. CAPACITOR	CEASR47M50
	C1838	ELECT. CAPACITOR	CEANL4R7M50
	C1839	ELECT. CAPACITOR	CEASR47M50
	C1840	ELECT. CAPACITOR	CEANL4R7M50
	C1841	ELECT. CAPACITOR	CEASR15M50
	C1842	ELECT. CAPACITOR	CEANL3R3M50
	C1843	AUDIO FILM CAPACITOR	CFTYA154J50
	C1844	PLASTIC FILM CAPACITOR	CQMA223J50
	C1845	PLASTIC FILM CAPACITOR	CQMA473J50
	C1846	ELECT. CAPACITOR	CEAS221M16
	C1847−1850	ELECT. CAPACITOR	CEAS100M50
	C1851	ELECT. CAPACITOR	CEAS221M16
	C1852, 1853	ELECT. CAPACITOR	CEAS100M50
	C1854, 1855	AUDIO FILM CAPACITOR	CFTYA104J50
	C1856	ELECT. CAPACITOR	CEASR47M50
	C1857	ELECT. CAPACITOR	CEANL4R7M50
	C1858	ELECT. CAPACITOR	CEASR47M50
	C1859	ELECT. CAPACITOR	CEANL4R7M50
	C1860	ELECT. CAPACITOR	CEASR15M50
	C1861	ELECT. CAPACITOR	CEANL3R3M50
	C1862	AUDIO FILM CAPACITOR	CFTYA154J50
	C1863	AUDIO FILM CAPACITOR	CFTYA474J50
	C1864, 1865	ELECT. CAPACITOR	CEAS101M16
	C1866	CERAMIC CAPACITOR	CKSQYF104Z50
	C1867−1869	ELECT. CAPACITOR	CEAS010M50
	C1870	CERAMIC CAPACITOR	CKSQYF104Z50
RESISTORS			
		ALL RESISTORS	RS1/10S□□□J
OTHERS			
	CN1801	15P SOCKET	KP200IB15L
	X1801	CRYSTAL RESONATOR	ASS1015

5. ADJUSTMENTS

ADJUSTMENT OF THE FM TUNER SECTION

●Set the FM/AM selector to FM BAND.
●Connect the wiring as shown in the Fig.1.

Step No.	Adjustment Title	FM SG (1kHz,±75kHz dev.)		Reception Frequency Display	Adjustment	
		Frequency (MHz)	Level (dBμ V)		Adjustment Location	Specifications
1	Center adjustment	98	80	98.0MHz	L6207	Adjust so that DC voltage between the IC6201-pin4 and pin 28(or⊕leads of C6224 and C6261) becomes 0V±50mV.
2	Front-end sensitivity adjustment	98	Low input (0 to 30)	98.0MHz	L6102 T6101	Adjust so that the DC voltage between the IC6201- pin12 and GND(or⊕lead of C6238 and GND) becomes maximum level.
3	TUNED IND. Lighting level	98	15 (±2dB)	98.0MHz	VR6201	Adjust so that the indicator of TUNED IND. starts to light up.

ADJUSTMENT OF MW TUNER SECTION

●Set the FM/AM selector to AM(MW)BAND.
●Connect the wiring as shown in the Fig.1.

Step No.	Adjustment Title	AM SG (400Hz,30% Mod.)		Reception Frequency Display	Adjustment	
		Frequency (kHz)	Level (dBμ V/m)		Adjustment Location	Specifications
1	TUNED IND. Lighting level	999 *1	47(±2dB)	999kHz *1	VR6202	Adjust so that the indicator of TUNED IND. starts to light up.

**1 : For the area using 10kHz step, frequencies should be 1000kHz.*

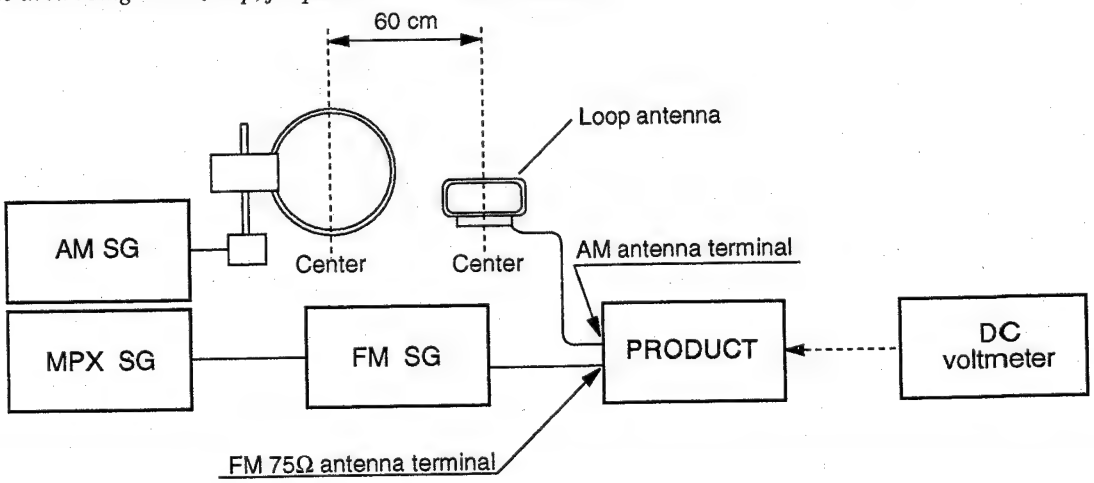

Fig. 1 AM and FM adjustment wiring diagram

FM/AM TUNER MODULE

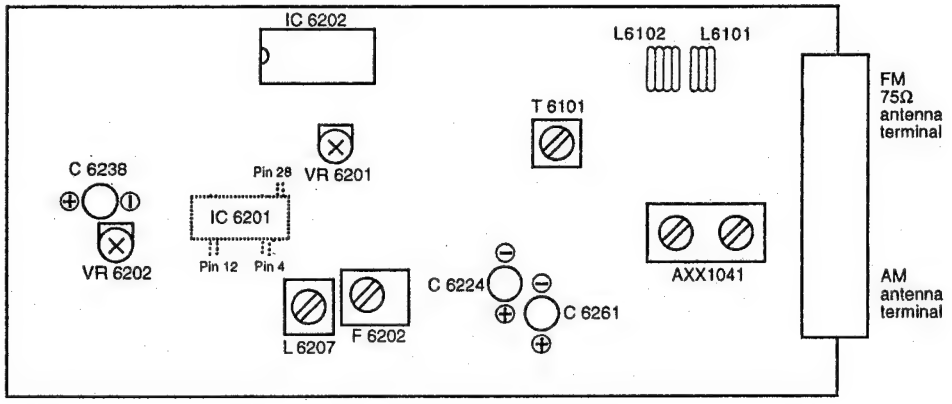

Fig. 2 Adjustment location

6. DISASSEMBLY

● POWER. AMP ASSY

Step1. Disconnect the AC power cord.

Step2. Remove the bonnet case.

Step3. Remove the screws Ⓐ through Ⓓ, which fasten the heat sink of the POWER. AMP assembly.

Step4. Disconnect the cable from CN10 of the R, C. SP assembly.

Step5. Disconnect the cable from CN11 of the POWER. AMP assembly by raising the assembly slightly.

Step6. Continue to raise the assembly and rotate it so that the fins of the heat sink face the bottom. Then return the assembly to its original position. (Avoid shorting the assembly by inserting insulation sheets or the like between the assembly and other assemblies.)

Step7. Re-connect the cable to CN11.

Note :

It is not necessary to re-connect the cable to CN10 of the R, C. SP assembly to check the POWER. AMP assembly.

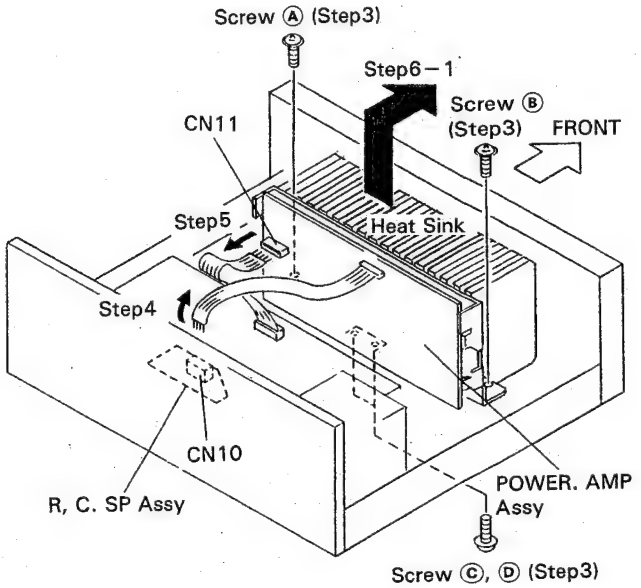

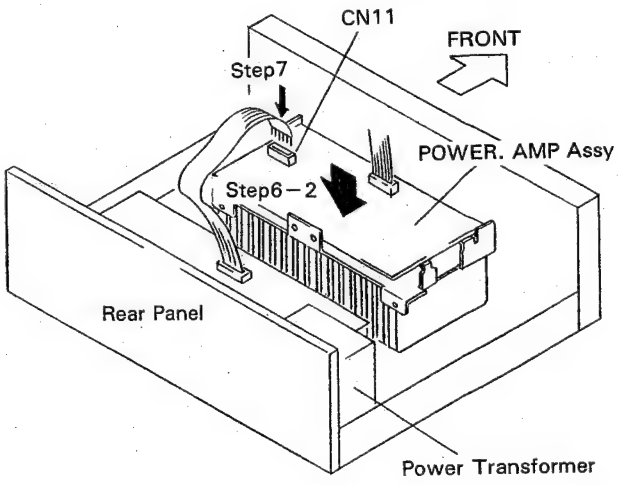

7. BLOCK DIAGRAM

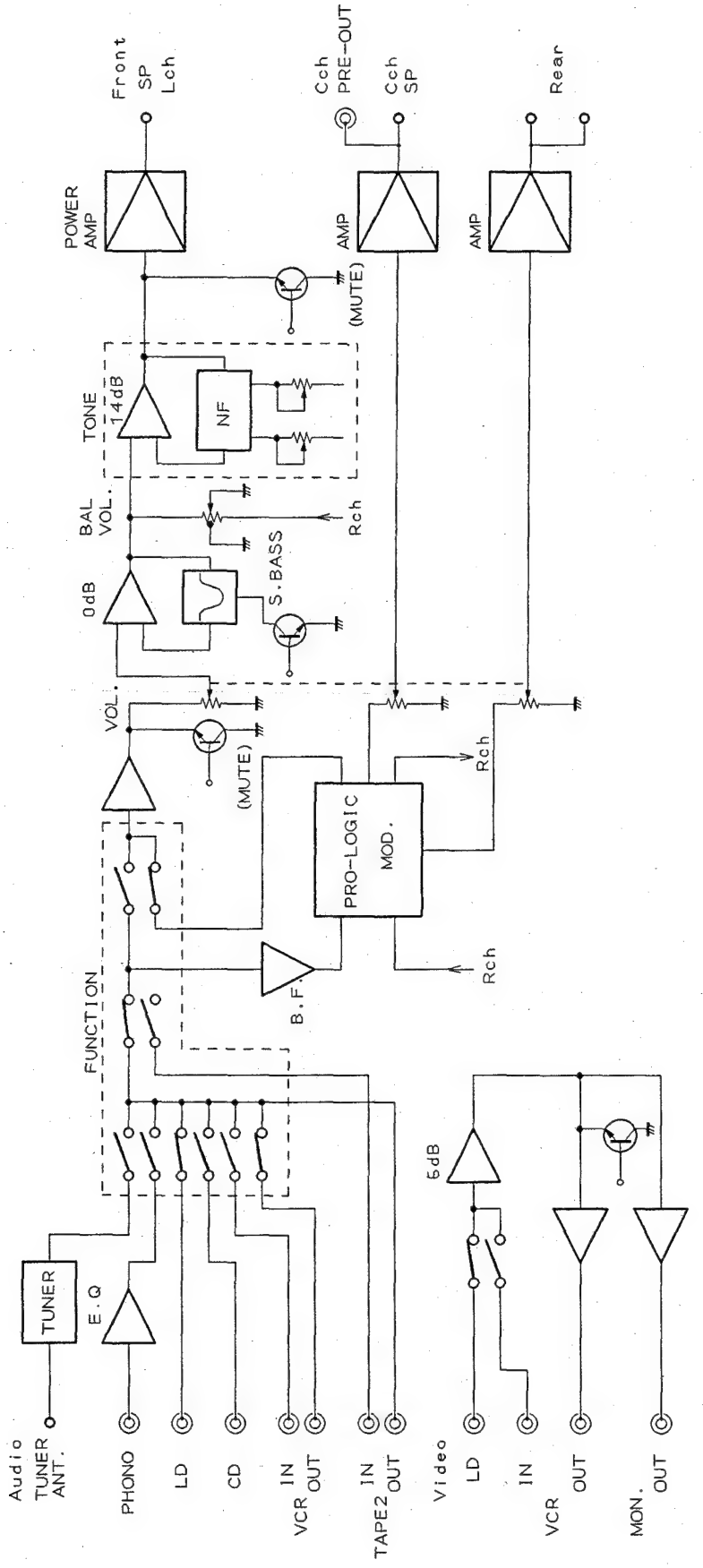

8. IC INFORMATION

- *The information shown in the list is basic information and may not correspond exactly to that shown in the schematic diagrams.*

■PDG115A(IC801) Digital delay

●Block diagram

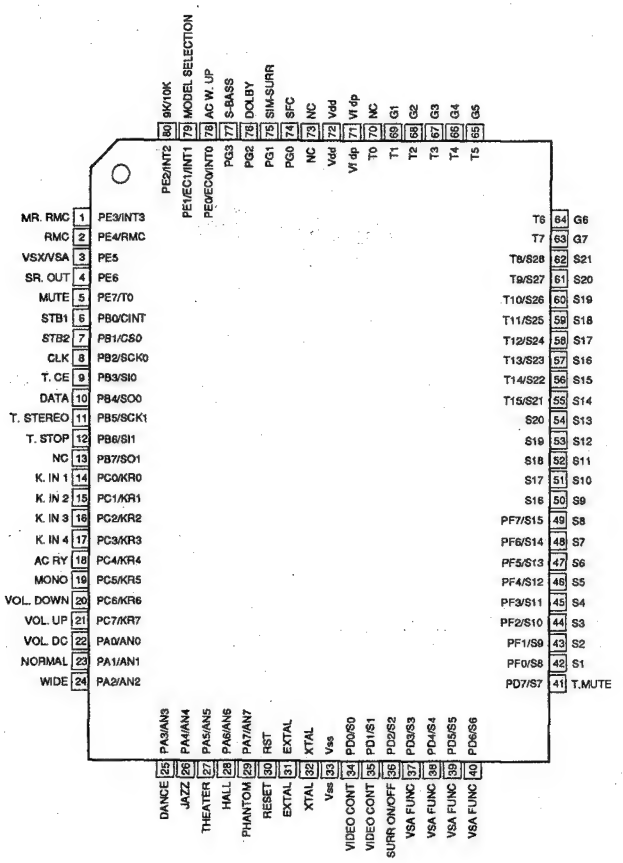

●Pin Function

No	Pin name	I/O	Function	ACTIVE
1	PE3/INT3 MR. RMC	I	Remote control unit signal input from sub-room	L
2	PE4/RMC RMC	I	Remote control unit signal input	H
3	PE5 VSX/VSA	I	VSX/VSA, VSP select (L/H)	
4	PE6 SR. OUT	O	SR output from Remote control signal	H
5	PE7/T0 MUTE	O	MUTE	H
6	PB0/CINT STB1	O	CE (LA2785, LV1010, LV1020) output for SURROUND IC	L
7	PB1/CS0 STB2	O	STROBE output for function IC	H
8	PB2/SCK0 CLK	O	CLOCK output	
9	PB3/SI0 T. CE	O	PLL IC (LLM7001) CE	H
10	PB4/SO0 DATA	O	DATA output	
11	PB5/SCK1 T. STEREO	I	TUNER STEREO ON/OFF	L
12	PB6/SI1 T. STOP	I	TUNED input	L
13	PB7/SO1 NC		NC	
14	PC0/KR0 K. IN 1	I	KEY scan input 1	H
15	PC1/KR1 K. IN 2	I	KEY scan input 2	H
16	PC2/KR2 K. IN 3	I	KEY scan input 3	H
17	PC3/KR3 K. IN 4	I	KEY scan input 4	H
18	PC4/KR4 AC RY	O	AC relay output	H
19	PC5/KR5 MONO	O	FM MONO	H
20	PC6/KR6 VOL. DOWN	O	VOLUME DOWN	H

21	PC7/KR7 VOL. UP	O	VOLUME UP	H
22	PA0/AN0 VOL. DC	I	VOLUME position selection	
23	PA1/AN1 NORMAL	O	CENTER MODE display (NORMAL)	H
24	PA2/AN2 WIDE	O	CENTER MODE display (WIDE)	H
25	PA3/AN3 DANCE	O	VSX : SFC MODE display (DANCE) VSA, VSP : SURR MODE display (3CH LOGIC)	H
26	PA4/AN4 JAZZ	O	SFC MODE display (JAZZ)	H
27	PA5/AN5 THEATER	O	VSX : SFC MODE display (THATER) VSA, VSP : MONO OUT MUTE	H L
28	PA6/AN6 HALL	O	SFC MODE display (HALL)	H
29	PA7/AN7 PHANTOM	O	CENTER MODE display (PHANTOM)	H
30	RST RESET	I	RESET input	
31	EXTAL EXTAL	I	oscillator 8MHz	
32	XTAL XTAL	O		
33	Vss Vss		GND	
34	PD0/S0 VIDEO CONT	O	VIDEO CONTROL	
35	PD1/S1 VIDEO CONT	O	VIDEO CONTROL	
36	PD2/S2 SURR ON/OFF	O	SURROUND ON/OFF	H
37	PD3/S3 VSA FUNC	O	VSA, VSP FUNCTION (INH A)	H
38	PD4/S4 VSA FUNC	O	VSA, VSP FUNCTION (INH V)	H
39	PD5/S5 VSA FUNC	O	VSA, VSP FUNCTION (A)	H
40	PD6/S6 VSA FUNC	O	VSA, VSP FUNCTION (B)	H
41	PD7/S7 T. MUTE	O	VSX : mute for TUNER VSA, VSP : -20dB MUTE	H
42	PF0/S8 S1/ K. OUT1	O	FL segment output1/KEY scan output1	H
43	PF1/S9 S2/ K. OUT2	O	FL segment output2/KEY scan output2	H
44	PF2/S10 S3/K. OUT3	O	FL segment output3/KEY scan output3	H
45	PF3/S11 S4/K. OUT4	O	FL segment output4/KEY scan output4	H
46	PF4/S12 S5/K. OUT5	O	FL segment output5/KEY scan output5	H
47	PF5/S13 S6/K. OUT6	O	FL segment output6/KEY scan output6	H
48	PF6/S14 S7/K. OUT7	O	FL segment output7/KEY scan output7	H
49	PF7/S15 S8/K. OUT8	O	FL segment output8/KEY scan output8	H
50	S16 S9/K. OUT9	O	FL segment output9/KEY scan output9	H

51	S17 S10/K. OUT10	O	FL segment output10/KEY scan output10	H
52	S18 S11/K. OUT11	O	FL segment output11/KEY scan output11	H
53	S19 S12/K. OUT12	O	FL segment output12/KEY scan output12 (VSA, VSP)	H
54	S20 S13/K. OUT13	O	FL segment output13/KEY scan output13 (VSA, VSP)	H
55	T15/S21 S14	O	FL segment output14	H
56	T14/S22 S15	O	FL segment output15	H
57	T13/S23 S16	O	FL segment output16	H
58	T12/S24 S17	O	FL segment output17	H
59	T11/S25 S18	O	FL segment output18	H
60	T10/S26 S19	O	FL segment output19	H
61	T9/S27 S20	O	FL segment output20	H
62	T8/S28 S21	O	FL segment output21	H
63	T7 G7	O	FL grid output7	H
64	T6 G6	O	FL grid output6	H
65	T5 G5	O	FL grid output5	H
66	T4 G4	O	FL grid output4	H
67	T3 G3	O	FL grid output3	H
68	T2 G2	O	FL grid output2	H
69	T1 G1	O	FL grid output1	H
70	T0 NC		NC	
71	Vf dp Vf dp		Power supply for FL	
72	Vdd Vdd		Power supply +5V	
73	NC NC		+5V	
74	PG0 SFC	O	K-112 : SURR MODE display (SFC) other than K-112 : SURR MODE display (STUDIO)	H
75	PG1 SIM-SURR	O	SURR MODE display (SUMULATED SURROUND)	H
76	PG2 DOLBY	O	SURR MODE display (DOLBY PRO LOGIC)	H
77	PG3 S-BASS	O	VSX : S-BASS ON/OFF VSA, VSP : LOUDNESS ON/OFF	H
78	PE0/EC0/INT0 AC W. UP	I	AC pulse input	
79	PE1/EC1/INT1 MODEL SELECTION	I	VSX : K-112/K-113, K-114 selection (H/L) VSA, VSP : K-119/K-152 selection (L/H)	
80	PE2/INT2 9K/10K	I	VSX : 9K/10K selection (H/L) VSA, VSP : EX/J selection (L/H)	

9. REMOTE CONTROL UNIT [CU-VSX083 (AXD1387)]

9.1 EXPLODED VIEW AND PARTS LIST

NOTES :

- *Parts marked by "NSP" are generally unavailable because they are not in our Master Spare Parts List.*
- *The ⚠ mark found on some component parts indicates the importance of the safety factor of the part. Therefore, when replacing, be sure to use parts of identical designation.*
- *Parts marked by "◉" are not always kept in stock. Their delivery time may be longer than usual or they may be unavailable.*

Parts List

Mark	No.	Description	Parts No.
	1	MODE CHECK KEY	AZA1335
	2	FILTER	AZA1336
	3	PLATE	AZA1982
	4	RUBBER SHEET	AZA1983
	5	.....	
	6	TERMINAL (+)	AZB1327
	7	TERMINAL (−)	AZB1328
	8	SCREW	AZB1329
	9	TERMINAL (C)	AZB1330
	10	CASE (A)	AZN2253
	11	CASE (B)	AZN2090
	12	BATTERY COVER	AZN2091
	13	SLIDE SW (S101)	AZS1132
	14	TACT SW (S102, S10, S14)	AZS1133
NSP	15	P. C. BOARD	AZW1130

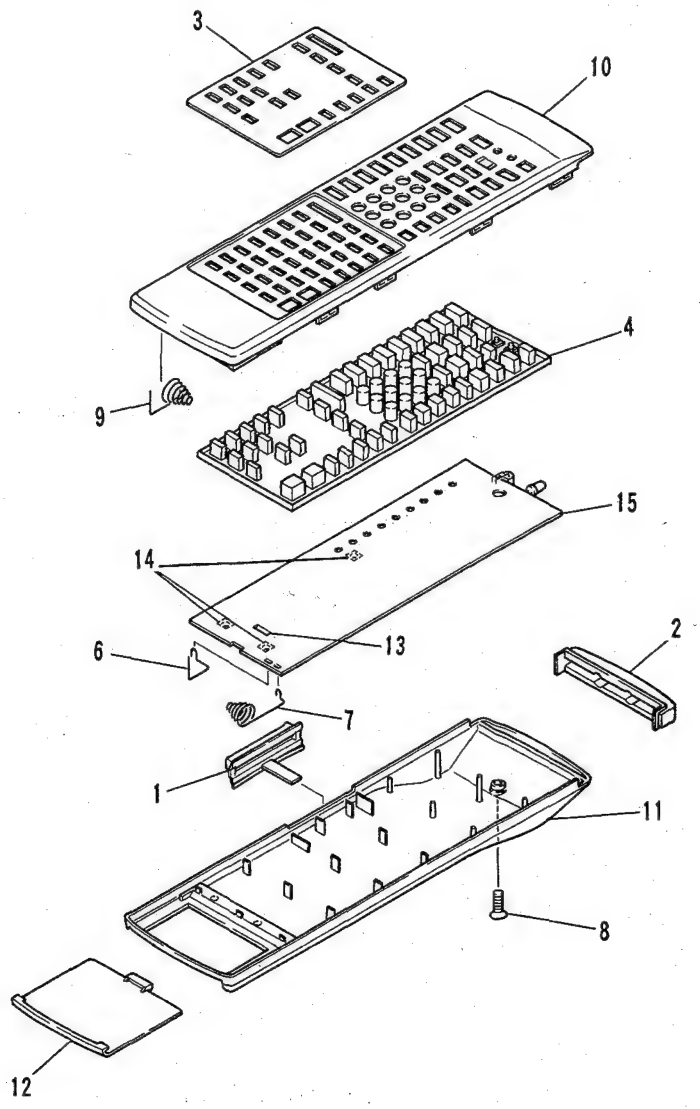

9.2 PCB PARTS LIST

NOTES :

- *Parts marked by "NSP" are generally unavailable because they are not in our Master Spare Parts List.*
- *The ⚠ mark found on some component parts indicates the importance of the safety factor of the part. Therefore, when replacing, be sure to use parts of identical designation.*
- *Parts marked by "◉" are not always kept in stock. Their delivery time may be longer than usual or they may be unavailable.*
- *When ordering resistors, first convert resistance values into code form as shown in the following examples.*

Ex. 1 When there are 2 effective digits (any digit apart from 0), such as 560 ohm and 47k ohm (tolerance is shown by J = 5%, and K = 10%).

560Ω → 56 × 10^1 → 561 ..... RD1/8PM [5][6][1] J
47kΩ → 47 × 10^3 → 473 ..... RD1/4PS [4][7][3] J
0.5Ω → 0R5 ..... RN2H [0][R][5] K
1Ω → 010 ..... RS1P [0][1][0] K

Ex. 2 When there are 3 effective digits (such as in high precision metal film resistors).

5.62kΩ → 562 × 10^1 → 5621 ..... RM1/4PC [5][6][2][1] F

Mark	No.	Description	Parts No.
SEMICONDUCTORS			
	IC1	μ−COM	ACM001−042
	IC2	IC	AZC1564
	IC3	LOGIC IC	TC74HC138AF
	Q1, 2	CHIP TRANSISTOR	2SC3052E
	Q3, 4	TRANSISTOR	2SD1622
	D1−6	DIODE	DWA010−TE
	D9−17	LED	AZC1573
	D7	LED	SLR−938C
	D8	DIODE	SPS−503C−3
CAPACITORS			
	C1, 2	CERAMIC CAPACITOR	CCDSL330J50
	C3	CERAMIC CAPACITOR	CCDSL221J50
	C4	CERAMIC CAPACITOR	CKDYX104M25
	C5	ELECT. CAPACITOR	CEAS470M10
	C6	CERAMIC CAPACITOR	CKDYB103K50
	C7	ELECT. CAPACITOR	CEAS221M10
	C8	ELECT. CAPACITOR	CEAS4R7M50
RESISTORS			
	R7, 8	CARBON FILM RESISTOR	RD1/4PMFL1R5J
		Other resistors	RD1/8PM□□□J
OTHERS			
	X1	RESONATOR	AZC1570

9.3 PCB PATTERN

: Indicates a chip resistor.

: Indicates a chip capacitor.

: Indicates a chip transistor.

: Indicates a chip diode.

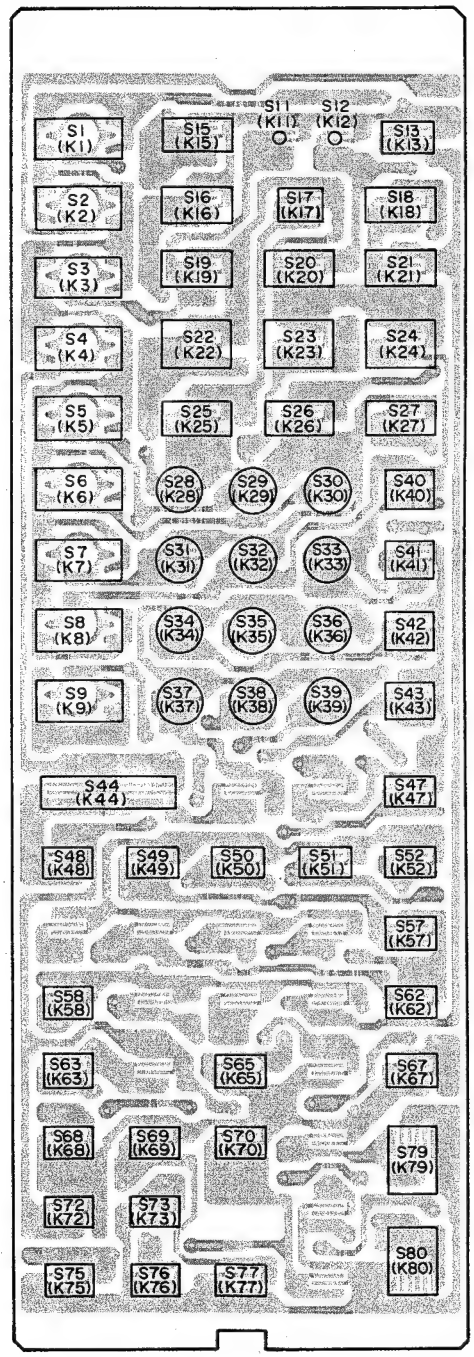

One time version only

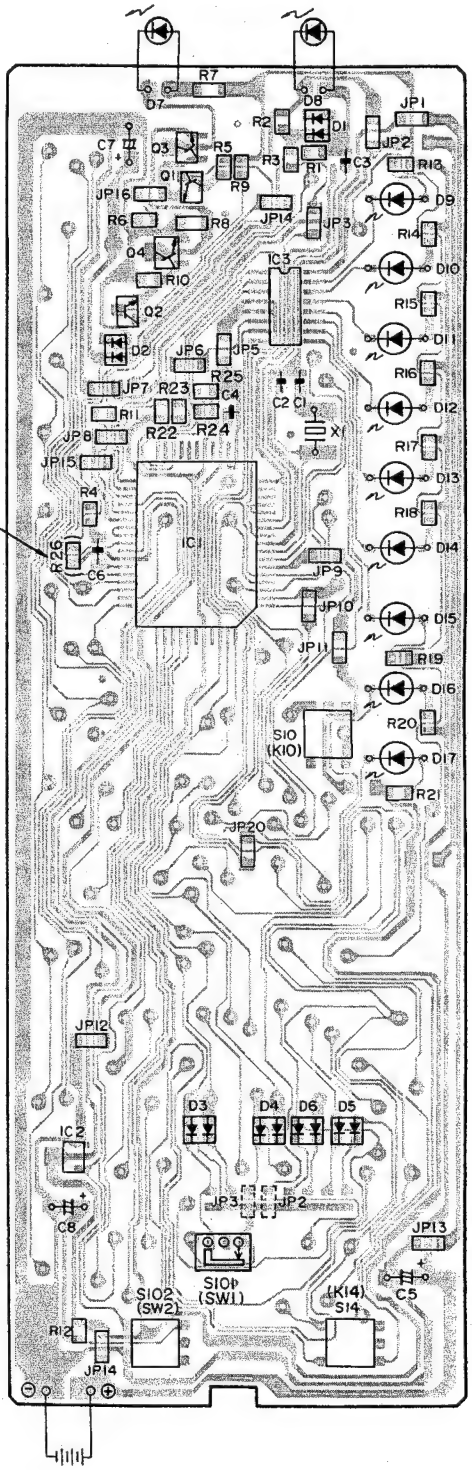

9.4 SCHEMATIC DIAGRAM

NOTE)

JP2 : The terminal for switching Fc (carrier frequency of the fixed code). This terminal is set at OPEN (Fc = 40kHz) when delivered. If a product of another manufacturer accidentally receives the PIONEER code, short the terminal so that Fc will be 36.7kHz. (In which case, the learned code and preset code do not change.)

JP3 : This remote control saves the learned data, timing data in ROM and other data (such as code data) in RAM. ROM already contains the timing data for other primary manufacturers. JP3 is a terminal for switching whether or not to use that pre-loaded timing data during learning.
This terminal is set at OPEN when delivered. If "data is learned but the product does not operate," there is the rare possibility that learned timing data is affected by the timing data for another primary manufacturer in ROM, causing the receiving product to be deactivated. In such a case, short JP3 to clear all the learned data and restart data learning, so that the data precision is increased. (In which case, the learned data in RAM is shared as is.)

NOTE

: Indicates a chip resistor.

: Indicates a chip capacitor.

: Indicates a chip transistor.

: Indicates a chip diode.

NOTE FOR SCHEMATIC DIAGRAMS (Type 2A)

1. **When ordering service parts, be sure to refer to "PARTS LIST of EXPLODED VIEWS" or "PCB PARTS LIST".**
2. **Since these are basic circuits, some parts of them or the values of some components may be changed for improvement.**
3. **RESISTORS:**
   Unit: k:kΩ, M:MΩ, or Ω unless otherwise noted.
   Rated power: 1/4W, 1/6W, 1/8W, 1/10W unless otherwise noted.
   Tolerance: (F): ±1%, (G): ±2%, (K): ±10%, (M): ±20% or ±5% unless otherwise noted.
4. **CAPACITORS:**
   Unit: p:pF or µF unless otherwise noted.
   Ratings: capacitor (µF)/ voltage (V) unless otherwise noted.
   Rated voltage: 50V except for electrolytic capacitors.
5. **COILS:**
   Unit: m:mH or µH unless otherwise noted.
6. **VOLTAGE AND CURRENT:**
   ⊐ or ⊏ V :
   DC voltage (V) at no input signal unless otherwise noted.
   ⇦ mA or ⊏ mA :
   DC current at no input signal unless otherwise noted.
7. **OTHERS:**
   • ⊘ or ⊘ : Adjusting point.
   • : Measurement point.
   • The ⚠ mark found on some component parts indicates the importance of the safety factor of the parts. Therefore, when replacing, be sure to use parts of identical designation.
8. **SCH—□ ON THE SCHEMATIC DIAGRAM:**
   • SCH—□ indicates the drawing number of the schematic diagram. (SCH stands for schematic diagram.)
9. **SWITCHES** (Underline indicates switch position):

The underline indicates the switch position

S101 : CENT. · BAL. / REAR · REAR BAL.
S102 : RESET
S1 : VCR1
S2 : VCR2
S3 : LD
S4 : TV
S5 : CD
S6 : TUNER
S7 : DECK I
S8 : DECK II
S9 : DAT
S10 : MODE CHECK
S11 : LEARN
S12 : EDIT
S13 : MULTI COMMAND
S14 : M. CLEAR
S15 : POWER
S16 : ⏮
S17 : REC
S18 : ⏭
S19 : ⏪
S20 : ◀ (SEARCH)
S21 : ⏩
S22 : ⏸
S23 : ⏹
S24 : ▶
S25 : TV/VCR (+10)
S26 : SELECT (DISP)
S27 : TV FUNC (BAND)
S28 : 1
S29 : 2
S30 : 3
S31 : 4
S32 : 5
S33 : 6
S34 : 7
S35 : 8
S36 : 9
S37 : 10/0
S38 : 11/PGM
S39 : 12/CLEAR
S40 : TV VOL/DISC SEL +
S41 : TV VOL/DISC SEL −
S42 : FREQ/CH (∧)
S43 : FREQ/CH (∨)
S44 : RECEIVER POWER
S47 : SLEEP
S48 : VCR/TAPE1
S49 : PHONO
S50 : TUNER
S51 : LD
S52 : CD
S57 : TAPE2 MONITOR
S58 : RETURN
S62 : S.BASS
S63 : SIMULATED STEREO
S65 : TEST TONE
S67 : MUTING
S68 : SURR MODE
S69 : 3CH LOGIC
S70 : CENTER MODE
S72 : REAR LEVEL +
S73 : CENTER LEVEL +
S75 : REAR LEVEL −
S76 : CENTER LEVEL −
S77 : DELAY TIME
S79 : MASTER VOLUME +
S80 : MASTER VOLUME −

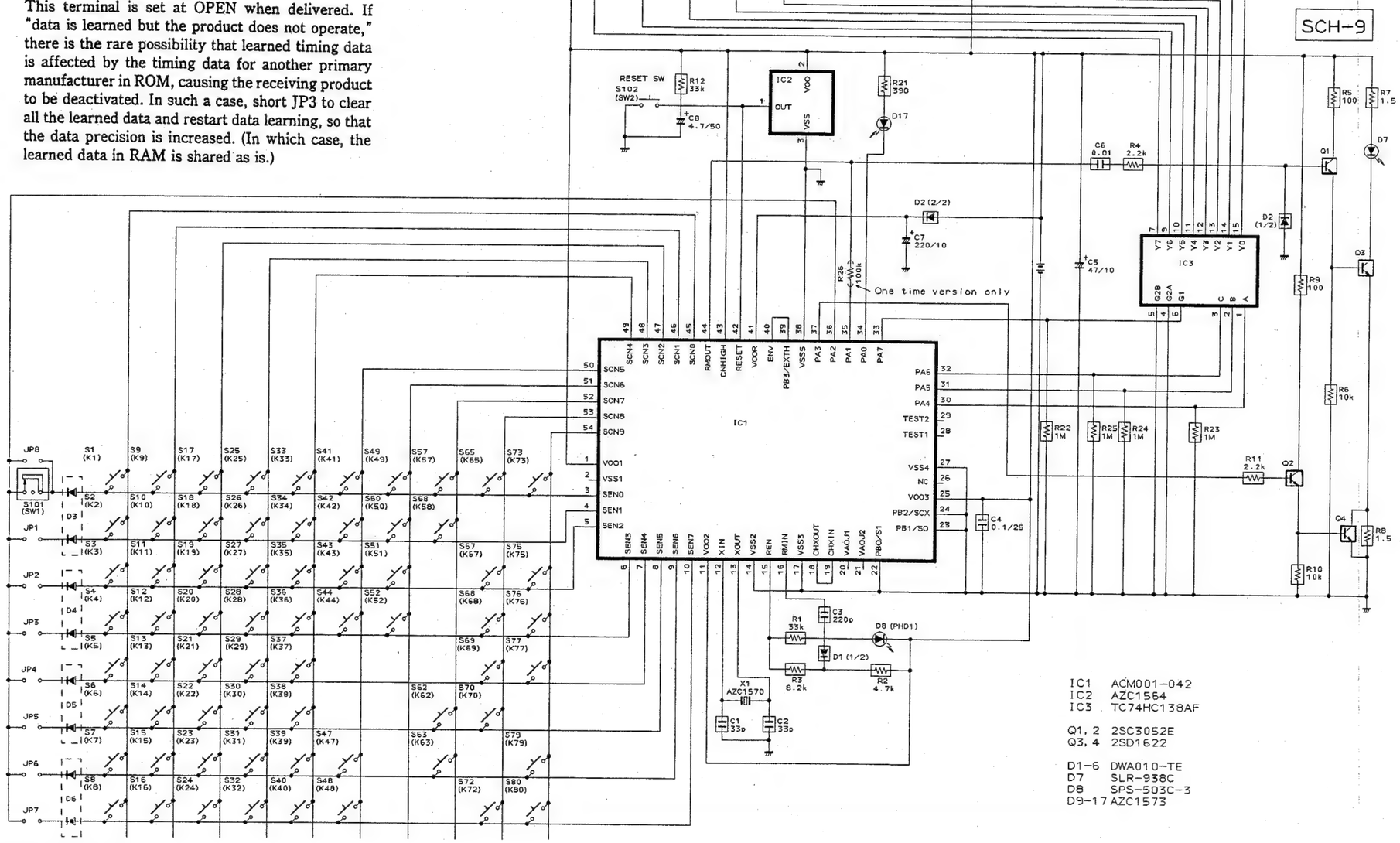

IC1 ACM001-042
IC2 AZC1564
IC3 TC74HC138AF

Q1, 2 2SC3052E
Q3, 4 2SD1622

D1-6 DWA010-TE
D7 SLR-938C
D8 SPS-503C-3
D9-17 AZC1573

10. PANEL FACILITIES

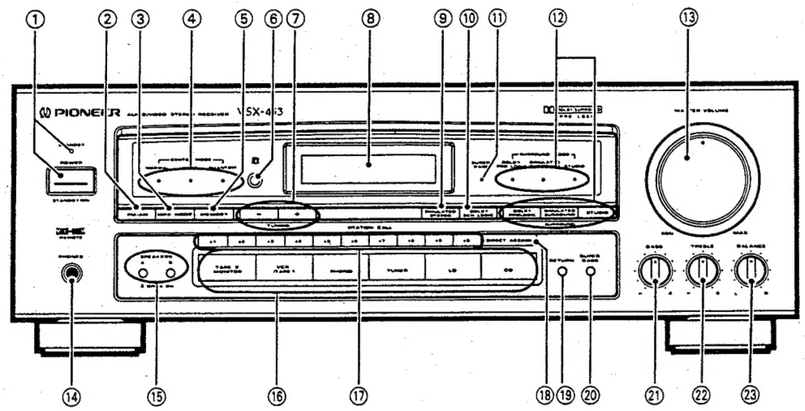

① POWER STANDBY/ON switch/STANDBY indicator

This is the switch for electric power.

ON : When set to the ON position, power is supplied and the unit becomes operational.

STANDBY : When set to STANDBY position, the main power flow is cut and the unit is no longer fully operational. A minute flow of power feeds the unit to maintain operation readiness.
The STANDBY indicator lights when the power is STANDBY, and goes out during ON.

[Timer ON/OFF possible]
When the unit is switched ON, ON/OFF control can be performed by means of the optional timer.

NOTE:
When the power is initially turned ON, muting will be applied to prevent sound from being output for about 6 seconds.

② FM/AM button

Use this to switch between FM and AM frequency band reception.

③ MPX MODE button

Use to select the auto stereo mode or monaural mode when listening to FM broadcasts. The monaural mode has been selected when the FM MONO indicator in the display section is lit.

Auto stereo mode:
Normally, leave in this mode for reception. When a stereo FM broadcast is received, it will be automatically reproduced in stereo.

Monaural mode:
Use if the signal is weak and there is too much noise when receiving an FM stereo broadcast. Reception becomes monaural, but noise is reduced.

NOTE:
This button has no effect on reception of AM broadcasts.

④ CENTER MODE indicators

⑤ MEMORY button

Pressing this button will result in the memorization of the current broadcast band, reception frequency, and FM AUTO/MONO mode.

⑥ Remote sensor window

⑦ TUNING buttons

+: Performs tuning from the currently displayed station frequency in ascending frequency order.
−: Performs tuning in order of descending frequencies.

⑧ Display section

⑨ SIMULATED STEREO button

Press to produce a simulated stereo effect when listening to monaural sources (for example, AM or TV broadcasts).
"SIMULATED STEREO" appears on the display section.

NOTE:
This effect is not produced through the rear speakers.

⑩ DOLBY 3CH LOGIC button

This switches on and off the DOLBY 3CH LOGIC. When it's in the on position, the "3CH LOGIC" indicator lights.

⑪ SUPER BASS indicator

Lights when SUPER BASS is ON.

⑫ SURROUND MODE selector buttons/indicators

⑬ MASTER VOLUME control

Use it to simultaneously adjust the sound volume from the front, center, and rear speakers.

⑭ PHONES jack

Connect the plug on your headphones to this jack. Set all SPEAKERS A and B switches to OFF if you want to cut the sound from speakers and listen to it only through the headphones.

⑮ SPEAKERS buttons (A, B) ■OFF ▂ON

ON/OFF switches for the A and B speaker systems.

NOTE:
No sound will be heard through the speakers when both A and B buttons are depressed if only one set of speakers has been connected to either A or B SPEAKERS terminals.

⑯ Input selector buttons

TAPE 2 MONITOR
: Press when performing playback on a second cassette deck and when monitoring recording.

VCR/TAPE 1 : Press when performing playback on a VCR unit or cassette deck.

PHONO : Press when playing records on a turntable.

TUNER : Press when listening to radio broadcasts.

LD : Press when performing playback on an LD player.

CD : Press when playing compact discs on a CD player.

⑰ STATION CALL buttons

Up to 30 FM or AM stations can be preset at random.
These buttons are used to preset and recall desired broadcasting stations, FM AUTO/MONO mode.

⑱ DIRECT ACCESS tuning button

When this button is pressed, the STATION CALL buttons function as ten-key number buttons for direct input of the desired reception frequency. Press again to cancel this mode.

⑲ RETURN button

Press this button to return the receiver into the initial state. TUNER is selected at this initial state. Adjust the sound level by using the MASTER VOLUME control.

- TAPE 2 MONITOR ..... Off
- SURROUND MODE ..... Off
- MUTING ..... Off
- FUNCTION ..... TUNER

Returns you to the last station you were receiving. When reception is not possible, auto tuning (UP) starts from that frequency.

NOTE:
If no sound is output after the RETURN button is pressed, make sure that SPEAKERS buttons are turned on.

⑳ SUPER BASS button

Switch ON when you want to boost bass. The SUPER BASS indicator lights.

㉑ BASS control

Use to adjust the low-frequency level.
Turn clockwise to boost bass, and counterclockwise to attenuate bass.

㉒ TREBLE control

Use to adjust the high-frequency level.
Turn clockwise to boost treble, and counterclockwise to attenuate treble.

㉓ BALANCE control

Use to adjust the sound volume balance between left and right speakers.
L: Decrease the sound on the right side.
R: Decrease the sound on the left side.
Usually, left and right volume levels should be the same.

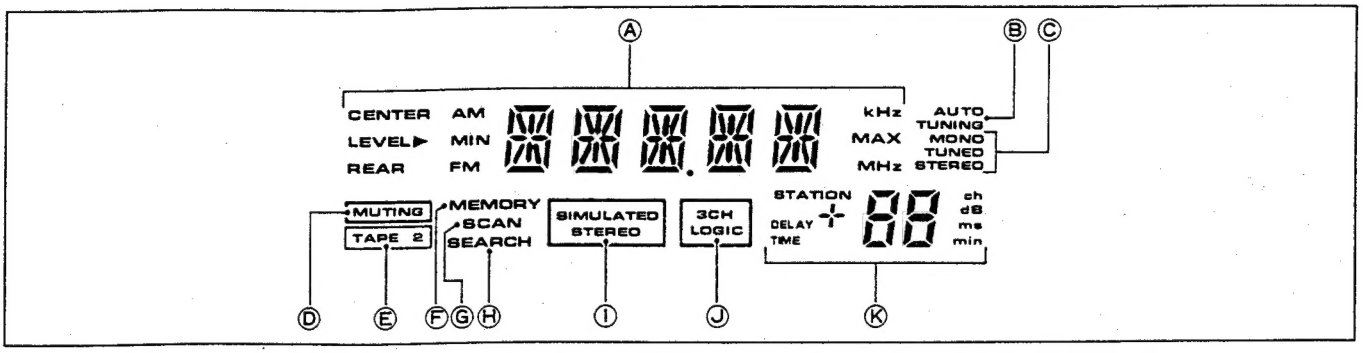

Ⓐ Character/Level display

- Displays function, frequency, and "SLEEP".
- It also displays the level settings during adjustment. During level display, MIN and MAX light.

Ⓑ AUTO TUNING indicator

Lights up when in the auto tuning mode.

Ⓒ Tuning indicator

TUNED : Lights up when a station is tuned in during TUNER operation.

MONO : Lights up when the FM MONO mode is selected with the MPX MODE button.

STEREO : Lights up when a stereo FM broadcast is being received.

Ⓓ MUTING indicator

Flashes when MUTING is ON.

Ⓔ TAPE 2 indicator

Lights up when the input selector is set to TAPE 2 MONITOR ON.

Ⓕ MEMORY indicator

When presetting stations, this lights when the MEMORY button is pressed.

Ⓖ SCAN indicator

Lights up during memory scan operation.

NOTE:

Memory scan can be operated by the VSX-453's remote control unit only.

Ⓗ SEARCH indicator

Lights during Return mode operation.

Ⓘ SIMULATED STEREO indicator

Ⓙ DOLBY 3CH LOGIC indicator

Ⓚ STATION/DELAY TIME/LEVEL/SLEEP TIME display

- Indicates the channel (ch) selected with the STATION CALL buttons.
- Indicates delay time (ms) when using SIMULATED SURROUND or DOLBY PRO LOGIC SURROUND.
- Indicates rear level and center level (dB).
- Indicates sleep timer settings (min).

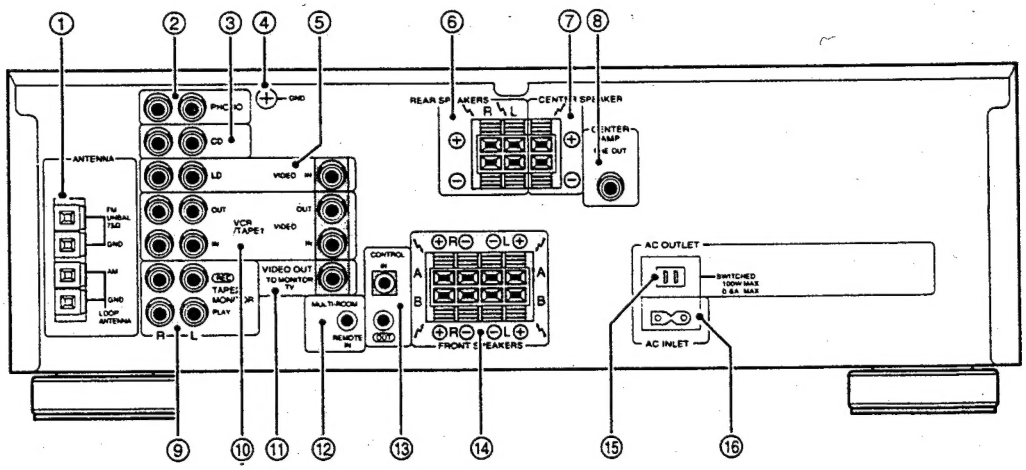

① FM/AM ANTENNA terminals
Connect to FM and AM antennas.

② PHONO input jacks
Connect to the output cables from a turntable.

③ CD input jacks
Connect to the output jacks of a compact disc player.

④ GND terminal
Connect the turntable ground lead to this terminal.
Loosen the screw, connect the ground lead, and then tighten the screw.

⑤ LD input jacks
Connect to an LD player's output jacks (audio, video).

⑥ REAR SPEAKERS terminals
Connect the rear speakers to these terminals.

NOTE:
Do not allow any of the cord's conductors to protrude from the terminals or touch any other conductors. Malfunctioning or breakdowns may occur when conductors come into contact with each other.
Use speakers with impedance of 8 Ω to 16 Ω.

⑦ CENTER SPEAKER terminals
Connect the center speaker to these terminals.
Use center speakers with impedance of 8 Ω to 16 Ω.

⑧ CENTER AMP PRE OUT jack
When a separate power amplifier is used to drive the surround center speaker, connect the power amplifier to this jack.

⑨ TAPE 2 MONITOR jacks
Connect to audio components such as a second cassette deck or graphic equalizer.

⑩ VCR/TAPE 1 jacks
Connect to the first cassette deck or to a VCR. With a VCR, also connect the video jacks.

⑪ VIDEO OUT (TO MONITOR TV) jack
Connect to a monitor TV.

⑫ MULTI-ROOM REMOTE IN jack
Connect to the separately sold MR-100 Multi-Room remote control unit.

⑬ CONTROL IN/OUT jacks
IN : Connect this jack to other Pioneer components (main unit or remote control unit) when using those components to control this unit.
OUT : Connect this jack to other Pioneer components when using the remote control of this unit to control the other components.

NOTE:
The receiver's remote sensor does not function when a plug is inserted in the IN jack. To operate, point the remote control unit at the remote sensor on the component to which the receiver's IN jack is connected.

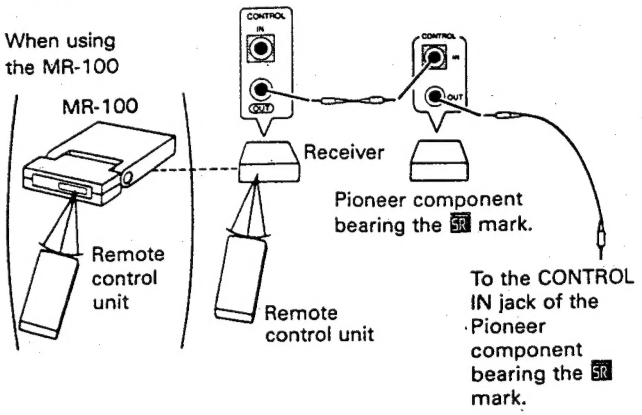

⑭ FRONT SPEAKERS terminals
A: Connect to the first set of speakers.
B: Connect to the second set of speakers.

NOTE:
Do not allow any of the cord's conductors to protrude from the terminals or touch any other conductors. Malfunctioning or breakdowns may occur when conductors come into contact with each other.
Use speakers with impedance of 8 Ω to 16 Ω.

⑮ AC OUTLET jack
[SWITCHED 100 W (0.8 A) MAX]
Power supplied through this outlet is turned on and off by the receiver's POWER switch. Electrical power consumption of the connected equipment should not exceed 100 W (0.8 A).

NOTE:
- *This unit should be disconnected by removing the power plug from the wall socket when not in regular use, e.g. when on vacation.*
- *Do not connect appliances with high power consumption such as heaters, irons, or television sets to this AC OUTLET in order to avoid overheating and fire risk.*
  This can cause the receiver to malfunction.

CAUTION:
DO NOT CONNECT MONITOR OR TV SET.

⑯ AC INLET jack
Connect the supplied power cord here.

11. SPECIFICATIONS

Amplifier Section

Continuous Power Output (in Stereo Mode)
Front ..... 100 W + 100 W (20 Hz to 20 kHz, 0.09 %, 8 Ω)
Continuous Power Output (When using SURROUND MODE)
Rear only driven ..... 20 W + 20 W (1 kHz, 0.8 %, 8 Ω)
Front and Center driven
Front ..... 60 W + 60 W (1 kHz, 0.8 %, 8 Ω)
Center (Only with DOLBY PRO LOGIC SURROUND) ..... 60 W (1 kHz, 0.8 %, 8 Ω)
Dynamic Power (2 Ω/4 Ω/8 Ω) ..... 255 W/190 W/145 W
Input (Sensitivity/Impedance)
PHONO MM ..... 2.8 mV/47 kΩ
CD, VCR/TAPE 1, TAPE 2, LD ..... 200 mV/47 kΩ
Phono Overload Level (T.H.D. 0.1 %, 1 kHz)*
PHONO MM ..... 100 mV
Frequency Response
PHONO MM ..... 20 Hz to 20,000 Hz ±0.5 dB
CD, VCR/TAPE 1, TAPE 2, LD ..... 10 Hz to 100,000 Hz $^{+0}_{-3}$ dB
Output (Level/Impedance)
VCR/TAPE 1 REC, TAPE 2 REC ..... 200 mV/2.2 kΩ
Tone Control
BASS ..... ±8 dB (100 Hz)
TREBLE ..... ±8 dB (10 kHz)
Signal-to-Noise Ratio (IHF, short circuited, A network)
PHONO MM ..... 72 dB
CD, VCR/TAPE 1, TAPE 2, LD ..... 96 dB
Signal-to-Noise Ratio [EIA at 1 W (1 kHz)]
PHONO MM ..... 75 dB
CD, VCR/TAPE 1, TAPE 2, LD ..... 79 dB

** Measured by Audio Spectrum Analyzer.*

VIDEO Section

Input (Sensitivity/Impedance)
VCR/TAPE 1, LD ..... 1 Vp-p/75 Ω
Output (Level/Impedance)
VCR/TAPE 1, MONITOR ..... 1 Vp-p/75 Ω
Frequency Response
VCR/TAPE 1, LD → MONITOR ..... 5 Hz to 10 MHz $^{+0}_{-3}$ dB
Signal-to-Noise Ratio ..... 55 dB
Cross Talk ..... 55 dB

MAINTENANCE OF EXTERNAL SURFACES

- Use a polishing cloth or dry cloth to wipe off dust and dirt.
- When the surfaces are dirty, wipe with a soft cloth dipped in some neutral cleanser diluted five or six times with water, and wrung out well, and then wipe again with a dry cloth. Do not use furniture wax or cleaners.
- Never use thinners, benzine, insecticide sprays or other chemicals on or near this unit, since these will corrode the surfaces.

FM Tuner Section

Frequency Range ..... 87.5 MHz to 108 MHz
Usable Sensitivity ..... Mono: 11.2 dBf, IHF (1.0 µV/75 Ω)
50 dB Quieting Sensitivity ..... Mono: 16.8 dBf
Stereo: 38.6 dBf
Signal-to-Noise Ratio ..... Mono: 73 dB (at 85 dBf)
Stereo: 70 dB (at 85 dBf)
Distortion ..... Stereo: 0.5 % (1 kHz)
Alternate Channel Selectivity ..... 60 dB (400 kHz)
Stereo Separation ..... 40 dB (1 kHz)
Frequency Response ..... 30 Hz to 15 kHz ±1 dB
Antenna Input ..... 75 Ω unbalanced

AM Tuner Section

Frequency Range ..... 530 kHz to 1,700 kHz
Sensitivity (IHF, Loop antenna) ..... 350 µV/m
Selectivity ..... 25 dB
Signal-to-Noise Ratio ..... 50 dB
Antenna ..... Loop antenna

Miscellaneous

Power Requirements ..... AC 120 Volts, 60 Hz
Power Consumption ..... 360 VA
AC outlet (switched) x 1 ..... 100 W (0.8 A) MAX
Dimensions ..... 420 (W) x 141 (H) x 349 (D) mm
Weight (without package) ..... 8.4 kg

Furnished Parts

FM Antenna 1
AM Loop Antenna 1
Dry Cell Batteries
VSX-453: size "AA" (IEC R6/UM-3) 2
VSX-463S: size "AA" (IEC LR6/AM-3) 2
Remote Control Unit 1
Power Cord 1
Operating Instructions 1

NOTE:
Specifications and the design are subject to possible modifications without notice, due to improvements.